Railroad Scales: An Essential Safety Tool

Tim Broemmer
Heavy Capacity Sales Director

RICE LAKE®
WEIGHING SYSTEMS

© Rice Lake Weighing Systems 230 W. Coleman Street, Rice Lake, WI 54868 USA www.ricelake.com
***Confidential** – Property of Rice Lake Weighing Systems All rights reserved*

Introduction

Tim Broemmer

- Heavy Capacity Sales Director, Rice Lake Weighing Systems
- AREMA Committee 34 Voting Member
- Vice President, NISA (National Industrial Scale Association)
- REMSA member
- NCWM member
- 12 years in the weighing industry/specializing in rail car weighing

© Rice Lake Weighing Systems 230 W. Coleman Street, Rice Lake, WI 54868 USA www.ricelake.com
Confidential – Property of Rice Lake Weighing Systems All rights reserved

Agenda

- Rail Scale Types/Uses
  - Legal for Trade (revenue)
  - Audit scales
  - Weigh-in-motion (WIM)
- Description of Railroad Scales in Use Today
  - Pros and cons of each scale type
- Costs of Underloading
- Fines and Consequences
- AAR Rail Scale Handbook
- Q&A

© Rice Lake Weighing Systems 230 W. Coleman Street, Rice Lake, WI 54868 USA www.ricelake.com
Confidential – Property of Rice Lake Weighing Systems All rights reserved

RICE LAKE WEIGHING SYSTEMS

Do You Need a Legal for Trade Rail Scale?

© Rice Lake Weighing Systems 230 W. Coleman Street, Rice Lake, WI 54868 USA www.ricelake.com
Confidential – Property of Rice Lake Weighing Systems All rights reserved

RICE LAKE WEIGHING SYSTEMS

Is LFT Necessary?

- Are you checkweighing rail cars?
- Are you using weight to track inventory?
- Are you verifying fully unloaded cars (no heel)?
- Are you performing non-commercial filling operations?
- Are you simply trying to avoid fines?

© Rice Lake Weighing Systems 230 W. Coleman Street, Rice Lake, WI 54868 USA www.ricelake.com
Confidential – Property of Rice Lake Weighing Systems All rights reserved

Revenue—Use LFT Scales

- Are you selling product using a weight readout?
- Are you purchasing incoming goods by weight?
- Are you issuing tolls, overload fines or other regulatory fees by weight?

© Rice Lake Weighing Systems 230 W. Coleman Street, Rice Lake, WI 54868 USA www.ricelake.com
Confidential – Property of Rice Lake Weighing Systems All rights reserved

Audit Scales

- Products shipped and received from one location
- Internal company shipments
- Material tracking
- Avoid costly overload fines

© Rice Lake Weighing Systems 230 W. Coleman Street, Rice Lake, WI 54868 USA www.ricelake.com
Confidential – Property of Rice Lake Weighing Systems All rights reserved

WIM Scales

- LFT or audit?
- Required accuracy level
- Site design or loadout
- Required speed of weighments

© Rice Lake Weighing Systems 230 W. Coleman Street, Rice Lake, WI 54868 USA www.ricelake.com
Confidential – Property of Rice Lake Weighing Systems All rights reserved

Styles of Rail Scales

- Modular
- Combination rail and truck
- Gauged rail
- Mounted sensor

© Rice Lake Weighing Systems 230 W. Coleman Street, Rice Lake, WI 54868 USA www.ricelake.com
Confidential – Property of Rice Lake Weighing Systems All rights reserved

Modular Scale

- Class IIIL accuracy
- “Pitless” design
- Spill containment ability
- Single module used in WIM

© Rice Lake Weighing Systems 230 W. Coleman Street, Rice Lake, WI 54868 USA www.ricelake.com
Confidential – Property of Rice Lake Weighing Systems All rights reserved

RICE LAKE WEIGHING SYSTEMS

Low Profile Modular Rail Scale Requirements

When planning your site for the installation of a Rice Lake rail scale, there are many variables to consider. Site preparations vary depending on soil conditions, tangent tracks, platform configurations or adaptations for Legal for Trade applications. Taking the time to ensure that your site meets these requirements before installation can avoid complications and additional costs down the line.

For more information, visit **www.ricelake.com/railscales.**

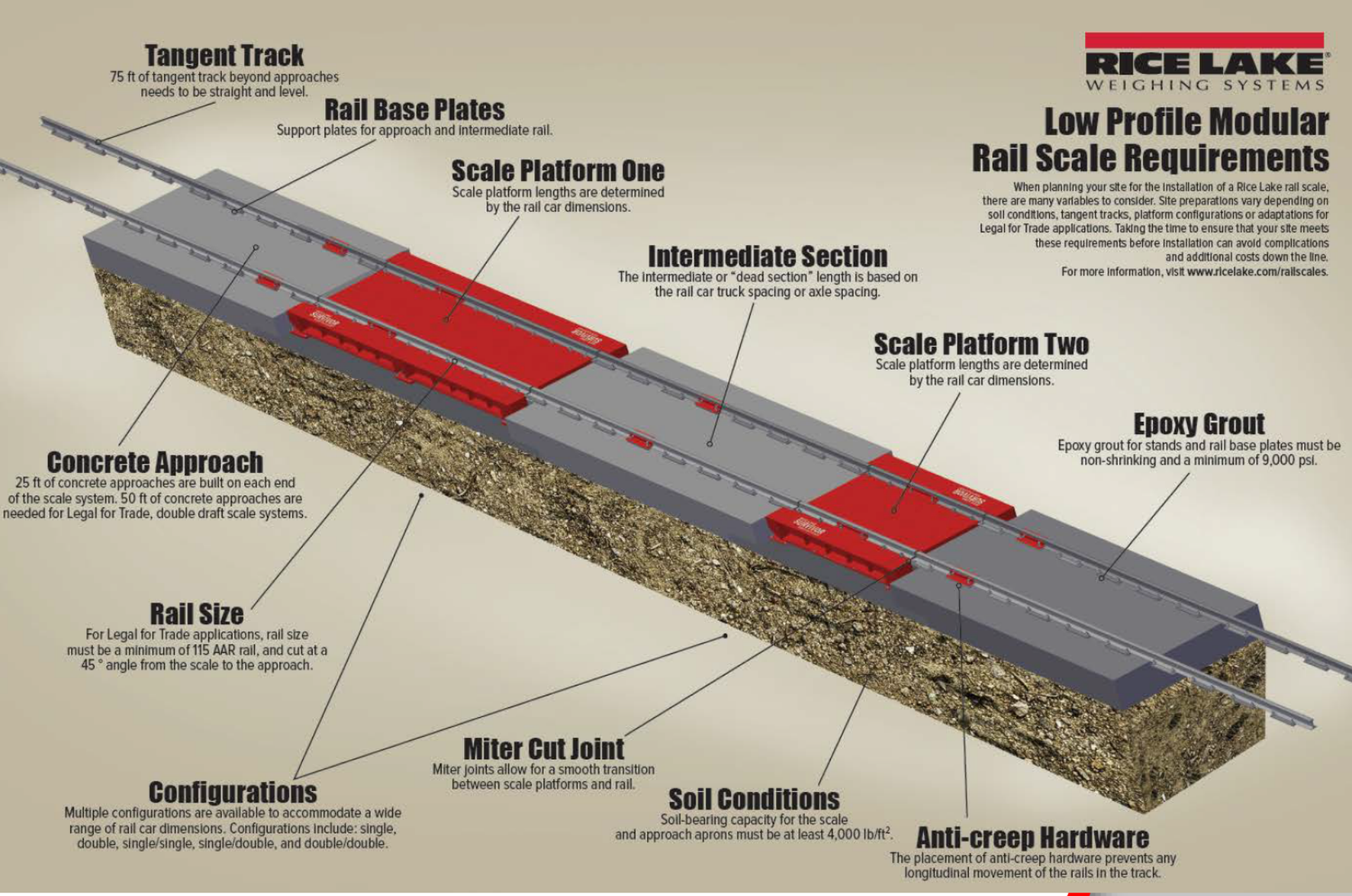

© Rice Lake Weighing Systems 230 W. Coleman Street, Rice Lake, WI 54868 USA www.ricelake.com
Confidential – Property of Rice Lake Weighing Systems All rights reserved

RICE LAKE WEIGHING SYSTEMS

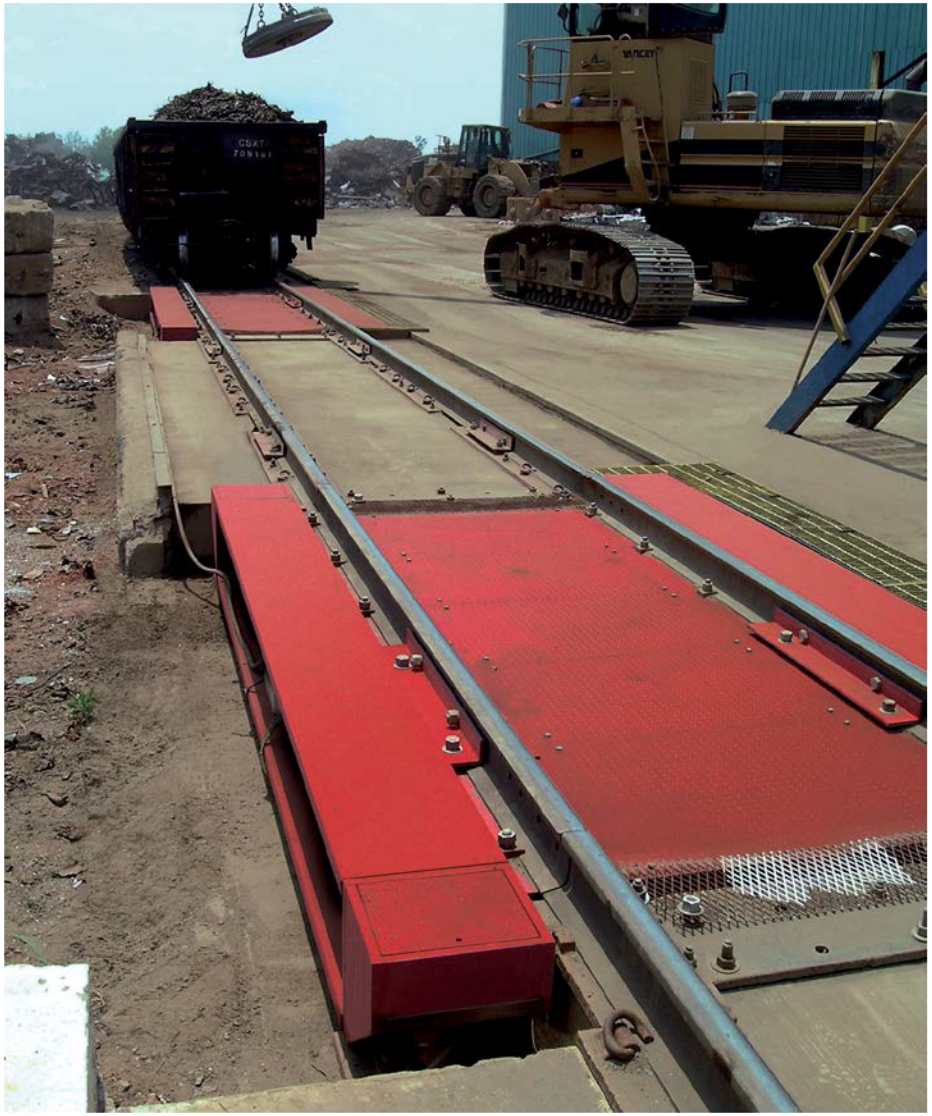

© Rice Lake Weighing Systems 230 W. Coleman Street, Rice Lake, WI 54868 USA www.ricelake.com
Confidential – Property of Rice Lake Weighing Systems All rights reserved

Combination Rail/Truck Scale

- Requires less real estate
- Safety concerns with vehicle traffic
- Changing division sizes
  - 20 lb and 50 lb
- Pits and confined spaces

© Rice Lake Weighing Systems 230 W. Coleman Street, Rice Lake, WI 54868 USA www.ricelake.com
Confidential – Property of Rice Lake Weighing Systems All rights reserved

© Rice Lake Weighing Systems 230 W. Coleman Street, Rice Lake, WI 54868 USA www.ricelake.com
Confidential – Property of Rice Lake Weighing Systems All rights reserved

Gauged Rail

- Currently “NOT” LFT
- Simple 1-2 day installations
- Less real estate
- 1/3 the cost of traditional LFT scales
- Good level of accuracy

© Rice Lake Weighing Systems 230 W. Coleman Street, Rice Lake, WI 54868 USA www.ricelake.com
Confidential – Property of Rice Lake Weighing Systems All rights reserved

© Rice Lake Weighing Systems 230 W. Coleman Street, Rice Lake, WI 54868 USA www.ricelake.com
Confidential – Property of Rice Lake Weighing Systems All rights reserved

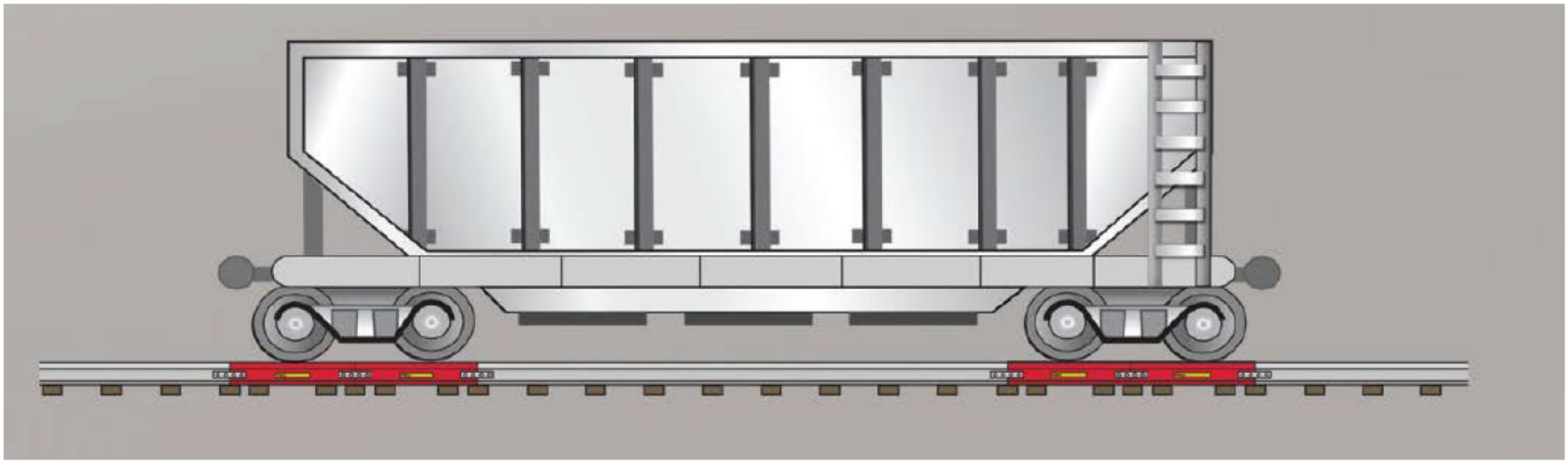

© Rice Lake Weighing Systems 230 W. Coleman Street, Rice Lake, WI 54868 USA www.ricelake.com
Confidential – Property of Rice Lake Weighing Systems All rights reserved

Mounted Sensor/Portable

- Bolted sensors or portable
- Least accurate of all scales
- Requires minimal real estate
- Not commonly calibrated with a mass standard
- May actually lift car off of the rail

© Rice Lake Weighing Systems 230 W. Coleman Street, Rice Lake, WI 54868 USA www.ricelake.com
Confidential – Property of Rice Lake Weighing Systems All rights reserved

© Rice Lake Weighing Systems 230 W. Coleman Street, Rice Lake, WI 54868 USA www.ricelake.com
Confidential – Property of Rice Lake Weighing Systems All rights reserved

WIM Scales

- Decreased accuracy compared to static weighments
- High maintenance level
- Increased speed and number of weighments
- Specific track layout

© Rice Lake Weighing Systems 230 W. Coleman Street, Rice Lake, WI 54868 USA www.ricelake.com
Confidential – Property of Rice Lake Weighing Systems All rights reserved

Safety Factor of Rail Scales

Improperly loaded rail cars can cause a variety of issues

- Derailment
- Railcar tipping
- Excessive track and component wear
- Reduced emergency handling capability
- Rail car stress

© Rice Lake Weighing Systems 230 W. Coleman Street, Rice Lake, WI 54868 USA www.ricelake.com
Confidential – Property of Rice Lake Weighing Systems All rights reserved

Weight vs. Volume

© Rice Lake Weighing Systems 230 W. Coleman Street, Rice Lake, WI 54868 USA www.ricelake.com
Confidential – Property of Rice Lake Weighing Systems All rights reserved

- Material expanding and contracting in tankers
  - 34,500 gallons vs. 263,000 lb
- Possible effects of sloshing loads on rail and cars
  - Unit train dynamics
- Weight restricted zones

© Rice Lake Weighing Systems 230 W. Coleman Street, Rice Lake, WI 54868 USA www.ricelake.com
Confidential – Property of Rice Lake Weighing Systems All rights reserved

Why Minimize Wasted Space?

Shipping underloaded rail cars by just 5% accumulates fast. In the span of 20 cars, you accumulate an entire rail car's worth of empty space.

100 Cars = $20,000 in savings……

© Rice Lake Weighing Systems 230 W. Coleman Street, Rice Lake, WI 54868 USA www.ricelake.com
Confidential – Property of Rice Lake Weighing Systems All rights reserved

Avoid Fines

- Class 1 railroad overweight fines
- 49 CFR §173.26 fines + additional compounded infractions
- Public exposure and civil penalties
- Injuries or deaths

© Rice Lake Weighing Systems 230 W. Coleman Street, Rice Lake, WI 54868 USA www.ricelake.com
Confidential – Property of Rice Lake Weighing Systems All rights reserved

AAR/AREMA 34 and Rail Scales

AAR Scale Handbook

The rules and specifications for construction and maintenance of track scales for the weighing of railroad vehicles. Includes railroad-related hopper scales, belt conveyor scales, mass flow meters, and non-railway vehicle scales

© Rice Lake Weighing Systems 230 W. Coleman Street, Rice Lake, WI 54868 USA www.ricelake.com
Confidential – Property of Rice Lake Weighing Systems All rights reserved

Q&A

Thank you very much for your time!

© Rice Lake Weighing Systems 230 W. Coleman Street, Rice Lake, WI 54868 USA www.ricelake.com
Confidential – Property of Rice Lake Weighing Systems All rights reserved