ASPECT CHARTS

REV	DATE	DESCRIPTION
1	07/22/16	AS-IN SERVICE

ALSTOM
ALSTOM TRANSPORT
INFORMATION SOLUTIONS

Designed By:	BPC
Drawn By:	BPC
Checked By:	BDW
Approved By:	AEB

TTCI

TTCI ASPECT CHARTS

COVER SHEET

Scale:	NTS
CADD File Name:	TTCI000.DWG
Submitted Date:	02/09/15
Sheet No.	000

INDEX OF DRAWINGS

SHT. NO.	DWG. NO.	REV.	DESCRIPTION
000	TTCI000.DWG	1	COVER SHEET
001	TTCI001.DWG	1	INDEX
002	TTCI002.DWG	1	CLOCKWISE ASPECTS AT RTT/TTT SIGNALS 101, 112, 302S, 303CW, 304S & 11
003	TTCI003.DWG	1	CLOCKWISE ASPECTS AT RTT INTERMEDIATE & HOLDOUT SIGNALS (SIGNAL MODE)
004	TTCI004.DWG	1	CLOCKWISE ASPECTS AT RTT INTERMEDIATE & HOLDOUT SIGNALS (CAB MODE)
005	TTCI005.DWG	1	COUNTER CLOCKWISE ASPECTS AT RTT/TTT SIGNALS 201, 212, 301, 302CCW, 303CCW, 305S & 21
006	TTCI006.DWG	1	COUNTER CLOCKWISE ASPECTS AT RTT/TTT INTERMEDIATE & HOLDOUT SIGNALS (SIGNAL MODE)
007	TTCI007.DWG	1	COUNTER CLOCKWISE ASPECTS AT RTT INTERMEDIATE & HOLDOUT SIGNALS (CAB MODE)
008	TTCI008.DWG	1	CLOCKWISE ASPECTS AT TTT INTERMEDIATE & HOLDOUT SIGNALS
009	TTCI009.DWG	1	COUNTER CLOCKWISE ASPECTS AT TTT INTERMEDIATE & HOLDOUT SIGNALS

REV	DATE	DESCRIPTION
1	07/22/16	AS-IN SERVICE

ALSTOM
ALSTOM TRANSPORT
INFORMATION SOLUTIONS

Designed By: BPC
Drawn By: BPC
Checked By: BDW
Approved By: AEB

TTCI

TTCI ASPECT CHART

INDEX

Scale: NTS
CADD File Name: TTCI001.DWG
Submitted Date: 02/09/15
Sheet No. 001

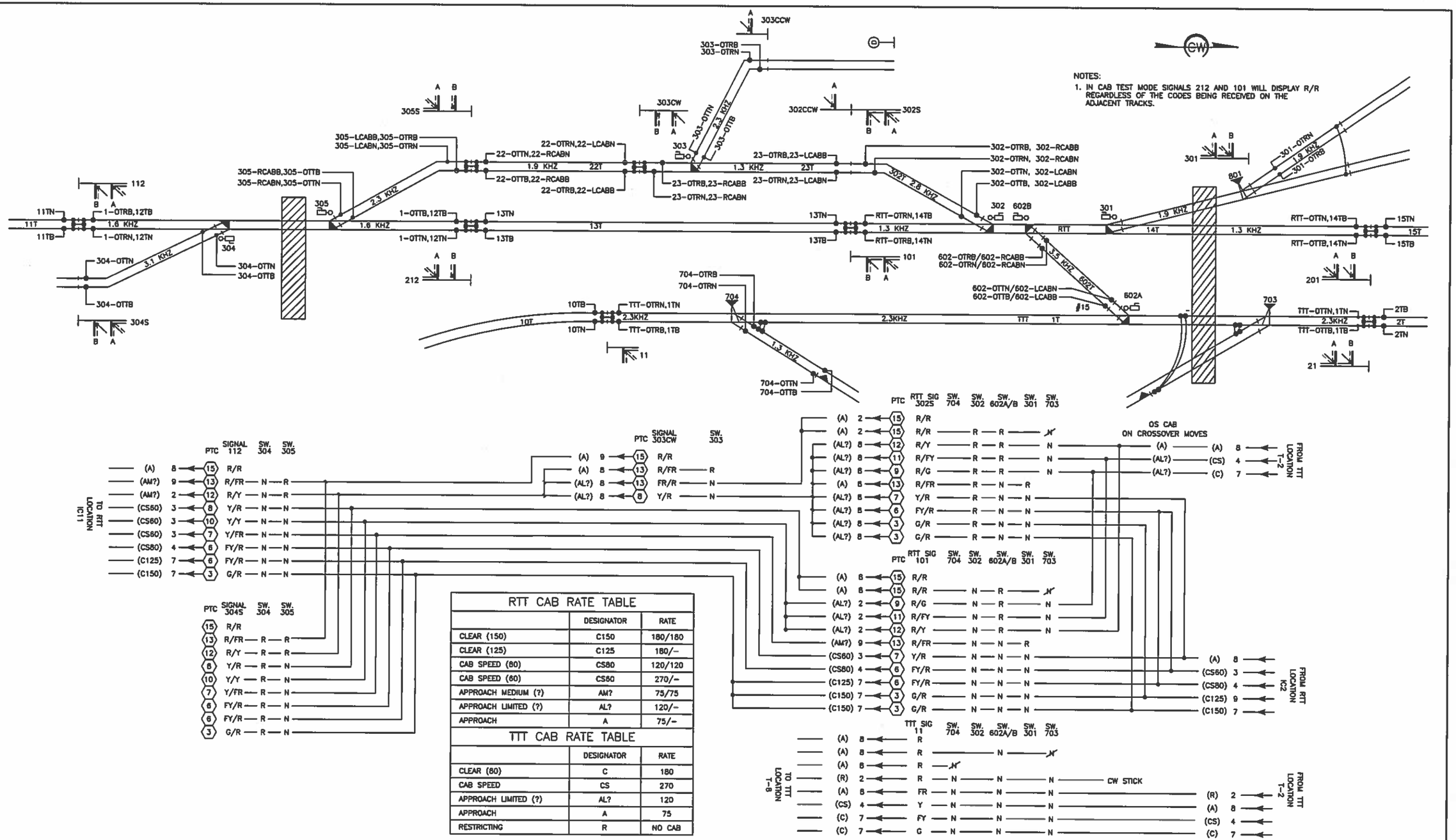

RTT CAB RATE TABLE

	DESIGNATOR	RATE
CLEAR (150)	C150	180/180
CLEAR (125)	C125	180/–
CAB SPEED (80)	CS80	120/120
CAB SPEED (60)	CS60	270/–
APPROACH MEDIUM (?)	AM?	75/75
APPROACH LIMITED (?)	AL?	120/–
APPROACH	A	75/–

TTT CAB RATE TABLE

	DESIGNATOR	RATE
CLEAR (80)	C	180
CAB SPEED	CS	270
APPROACH LIMITED (?)	AL?	120
APPROACH	A	75
RESTRICTING	R	NO CAB

REV	DATE	DESCRIPTION
1	07/22/16	AS-IN SERVICE

ALSTOM
ALSTOM TRANSPORT INFORMATION SOLUTIONS

Designed By: BPC
Drawn By: SAT
Checked By: BDV
Approved By: AEB

TTCI

CLOCKWISE ASPECTS AT RTT/TTT SIGNALS 101, 112, 302S, 303CW, 304S & 11

Scale: NTS
CADD File Name: TTCI002.DWG
Submitted Date: 11/26/14
Sheet No. 002

CAB RATE TABLE		
	DESIGNATOR	RATE
CLEAR (150)	C150	180/180
CLEAR (125)	C125	180/–
CAB SPEED (80)	CS80	120/120
CAB SPEED (60)	CS60	270/–
APPROACH LIMITED (?)	AL?	120/–
APPROACH MEDIUM (?)	AM?	75/75
APPROACH	A	75/–

NOTES:
1. IN CAB SIGNALING MODE, SIGNALS AT IC2 THROUGH IC11 WILL BE DARK.

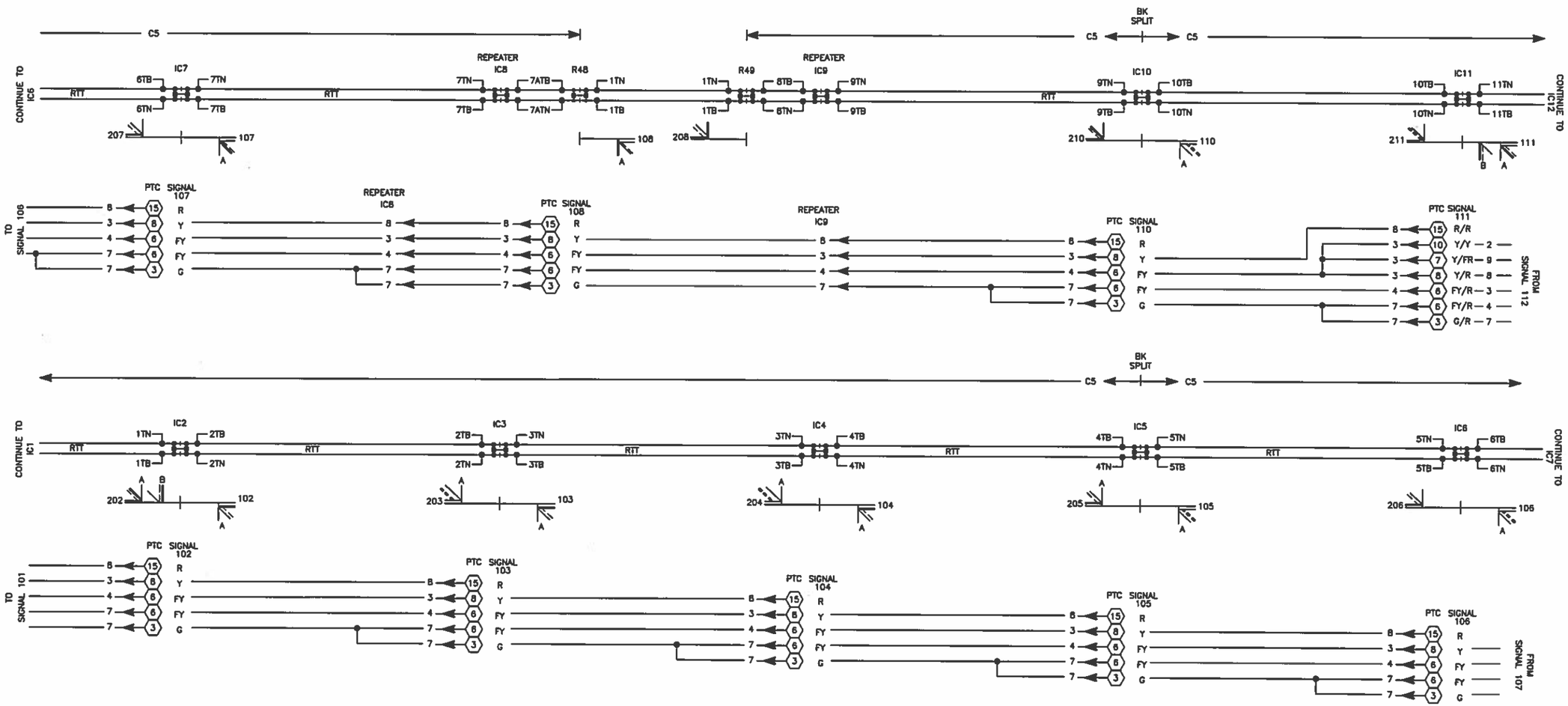

REV	DATE	DESCRIPTION
1	07/22/16	AS-IN SERVICE

ALSTOM
ALSTOM TRANSPORT INFORMATION SOLUTIONS

Designed By: BPC
Drawn By: SAT
Checked By: BDV
Approved By: AEB

TTCI

CLOCKWISE ASPECTS AT RTT INTERMEDIATE & HOLDOUT SIGNALS (SIGNAL MODE)

Scale: NTS
CADD File Name: TTCI003.DWG
Submitted Date: 11/26/2014
Sheet No. 003

CAB RATE TABLE		
	DESIGNATOR	RATE
CLEAR (150)	C150	180/180
CLEAR (125)	C125	180/–
CAB SPEED (80)	CS80	120/120
CAB SPEED (60)	CS60	270/–
APPROACH LIMITED (?)	AL?	120/–
APPROACH MEDIUM (?)	AM?	75/75
APPROACH	A	75/–

NOTES:
1. IN CAB SIGNALING MODE, SIGNALS AT IC2 THROUGH IC11 WILL BE DARK.

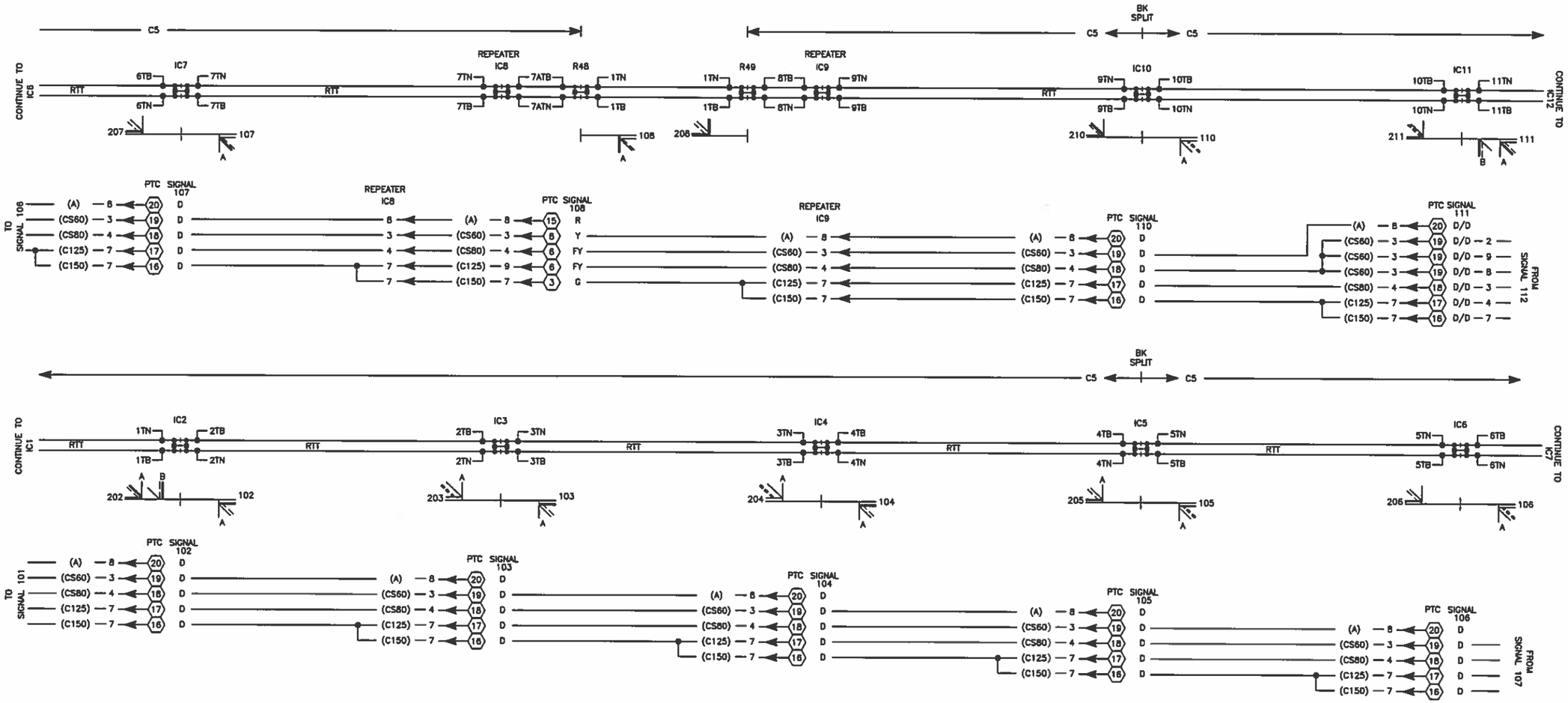

REV	DATE	DESCRIPTION
1	07/22/16	AS-IN SERVICE

ALSTOM
ALSTOM TRANSPORT INFORMATION SOLUTIONS

Designed By: BPC
Drawn By: SAT
Checked By: BDV
Approved By: AEB

TTCI

CLOCKWISE ASPECTS AT RTT INTERMEDIATE & HOLDOUT SIGNALS (CAB MODE)

Scale: NTS
CADD File Name: TTCI004.DWG
Submitted Date: 11/26/14
Sheet No. 004

NOTES:

1. IN CAB TEST MODE SIGNALS 212 AND 101 WILL DISPLAY R/R REGARDLESS OF THE CODES BEING RECEIVED ON THE ADJACENT TRACKS.

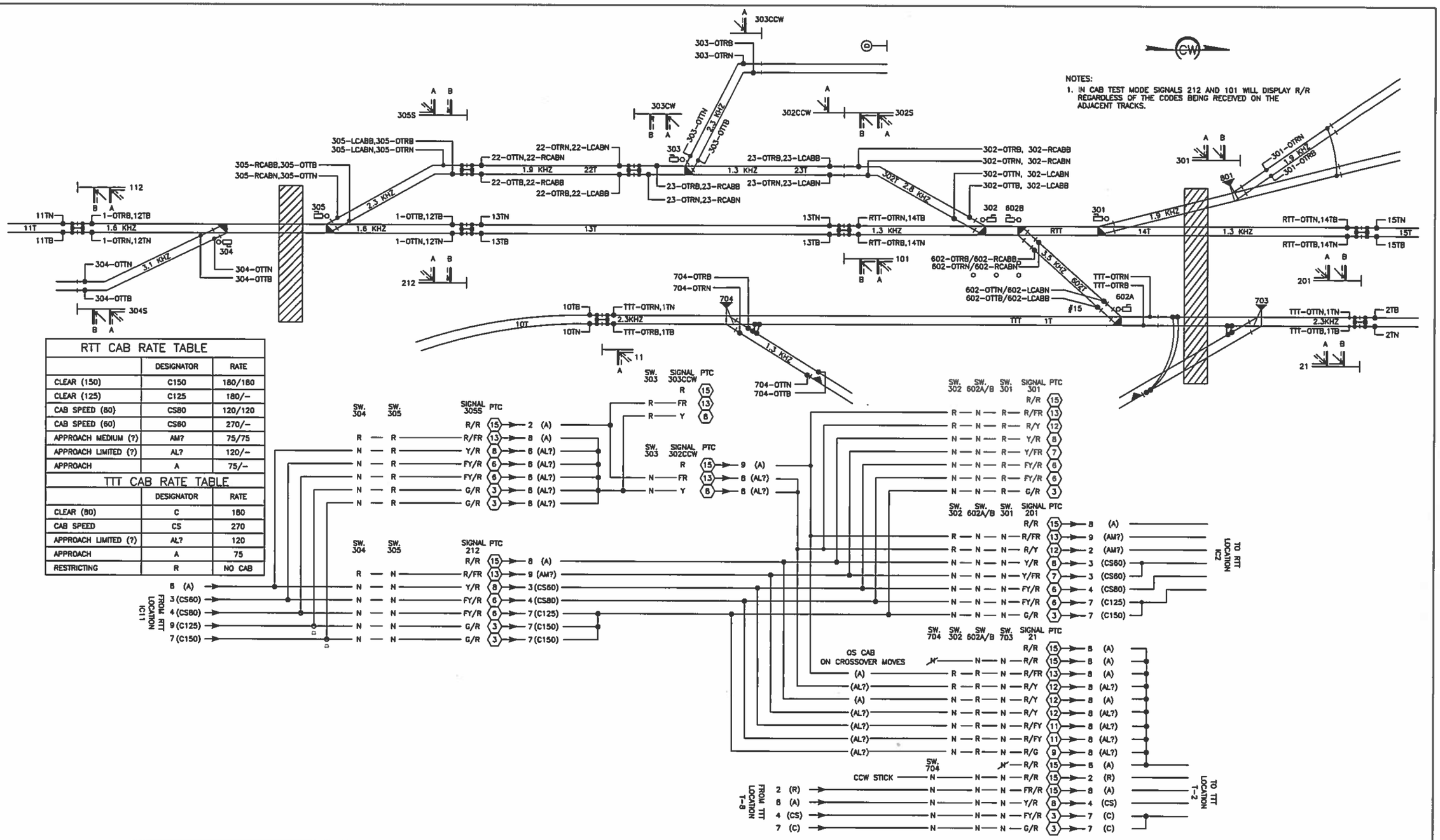

RTT CAB RATE TABLE

	DESIGNATOR	RATE
CLEAR (150)	C150	180/180
CLEAR (125)	C125	180/–
CAB SPEED (80)	CS80	120/120
CAB SPEED (60)	CS60	270/–
APPROACH MEDIUM (?)	AM?	75/75
APPROACH LIMITED (?)	AL?	120/–
APPROACH	A	75/–

TTT CAB RATE TABLE

	DESIGNATOR	RATE
CLEAR (80)	C	180
CAB SPEED	CS	270
APPROACH LIMITED (?)	AL?	120
APPROACH	A	75
RESTRICTING	R	NO CAB

REV	DATE	DESCRIPTION
1	07/22/16	AS-IN SERVICE

ALSTOM
ALSTOM TRANSPORT INFORMATION SOLUTIONS

Designed By:	BPC
Drawn By:	SAT
Checked By:	BDV
Approved By:	AEB

TTCI

COUNTER CLOCKWISE ASPECTS AT RTT/TTT SIGNALS 201, 212, 301, 302CCW, 303CCW, 305S & 602

Scale:	NTS
CADD File Name:	TTCI005.DWG
Submitted Date:	11/26/14
Sheet No.	005

NOTES:

1. IN CAB SIGNALING MODE, SIGNALS AT IC2 THROUGH IC11 WILL BE DARK.

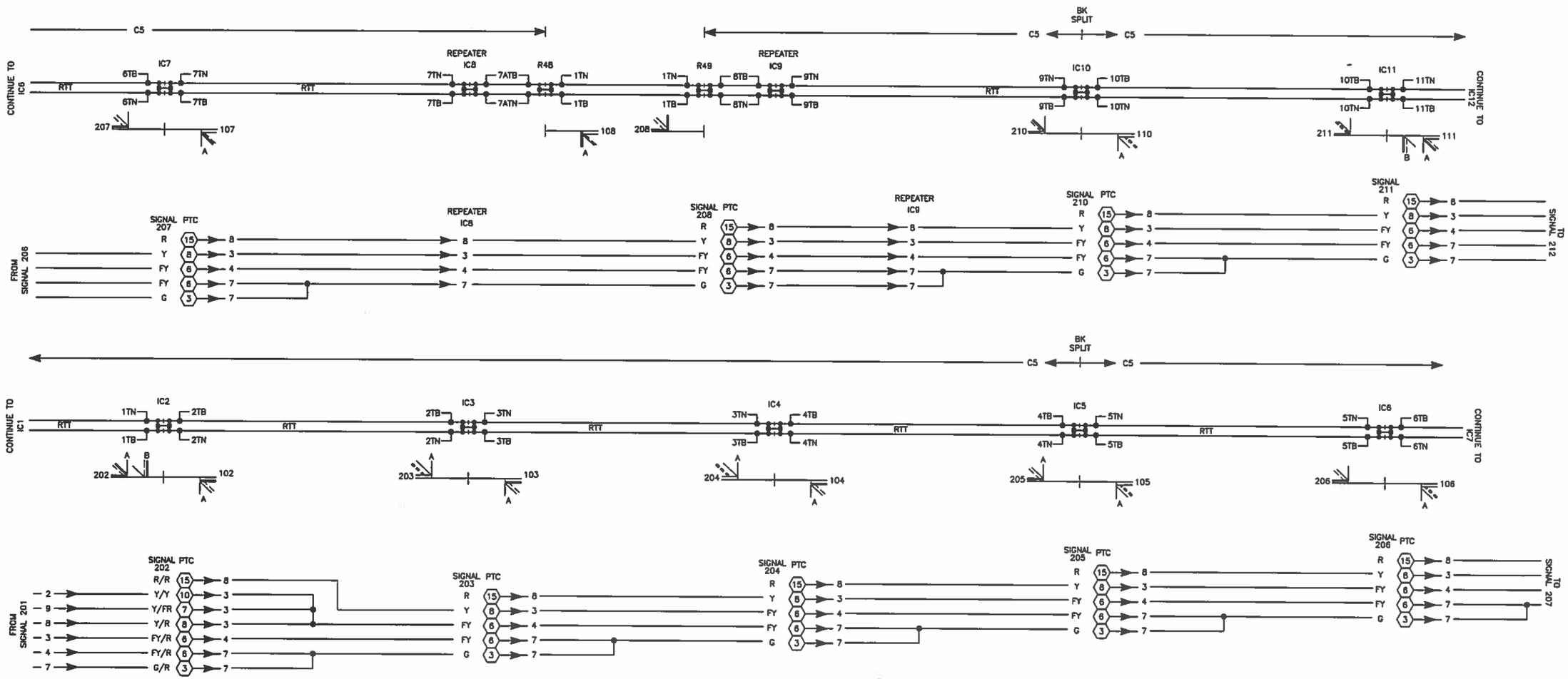

REV	DATE	DESCRIPTION
1	07/22/16	AS-IN SERVICE

ALSTOM
ALSTOM TRANSPORT INFORMATION SOLUTIONS

Designed By:	BPC
Drawn By:	SAT
Checked By:	BDV
Approved By:	AEB

TTCI

COUNTER CLOCKWISE ASPECTS AT RTT INTERMEDIATE & HOLDOUT SIGNALS (SIGNAL MODE)

Scale:	NTS
CADD File Name:	TTCI006.DWG
Submitted Date:	11/26/14
Sheet No.	006

CAB RATE TABLE		
	DESIGNATOR	RATE
CLEAR (150)	C150	180/180
CLEAR (125)	C125	180/–
CAB SPEED (80)	CS80	120/120
CAB SPEED (60)	CS60	270/–
APPROACH LIMITED (?)	AL?	120/–
APPROACH MEDIUM (?)	AM?	75/75
APPROACH	A	75/–

NOTES:
1. IN CAB SIGNALING MODE, SIGNALS AT IC2 THROUGH IC11 WILL BE DARK.

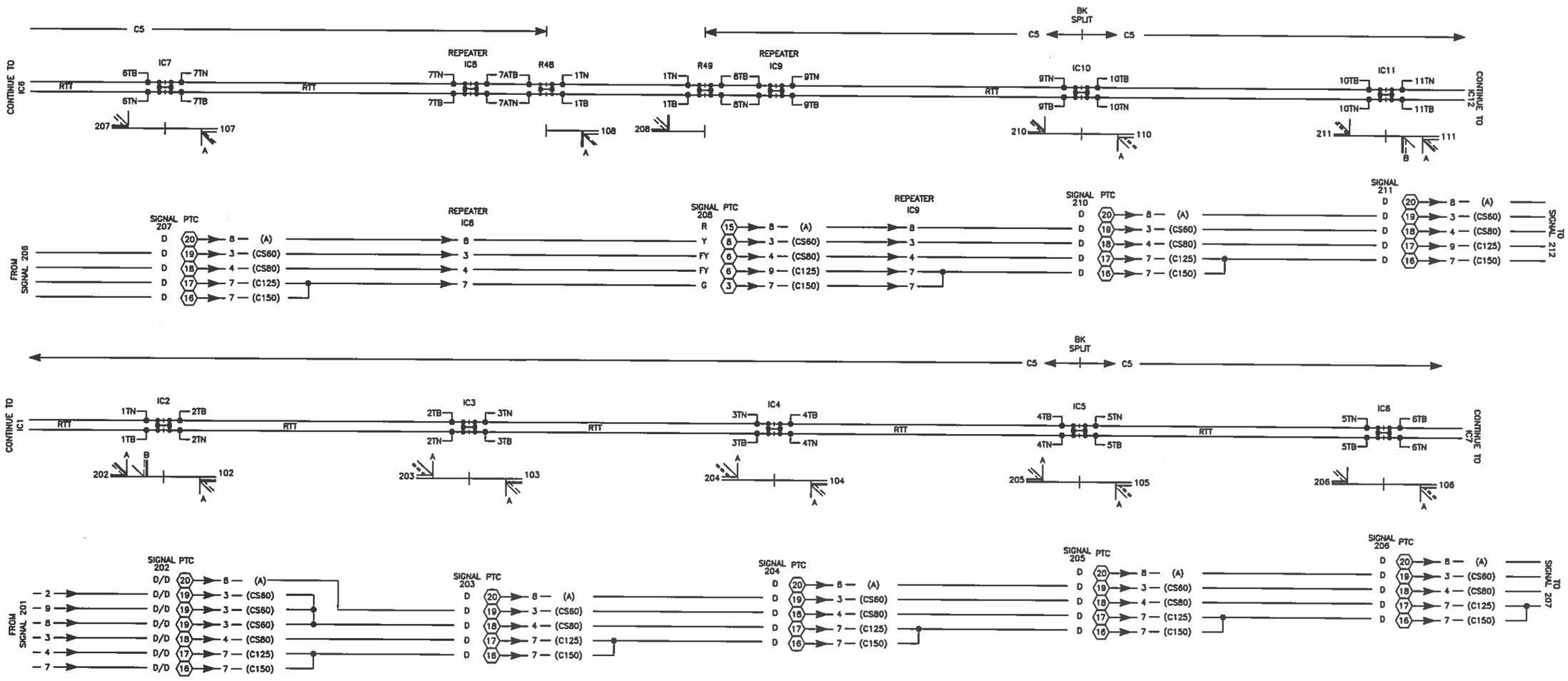

REV	DATE	DESCRIPTION
1	07/22/16	AS-IN SERVICE

ALSTOM
ALSTOM TRANSPORT INFORMATION SOLUTIONS

Designed By: BPC
Drawn By: SAT
Checked By: BDV
Approved By: AEB

TTCI

COUNTER CLOCKWISE ASPECTS AT RTT INTERMEDIATE & HOLDOUT SIGNALS (CAB MODE)

Scale: NTS
CADD File Name: TTCI007.DWG
Submitted Date: 11/26/14
Sheet No. 007

TTT CAB RATE TABLE		
	DESIGNATOR	RATE
CLEAR	C	180
CAB SPEED	CS	270
APPROACH	A	75
RESTRICTING	R	NO CAB

NOTES:

1. THE INSULATED JOINTS AT THE HANDTHROW SWITCHES ARE BYPASSED ONLY WHEN THE SWITCH IS LOCKED IN THE NORMAL POSITION.
2. PERMANENT DERAILS REQUIRED AT FOULING POINT

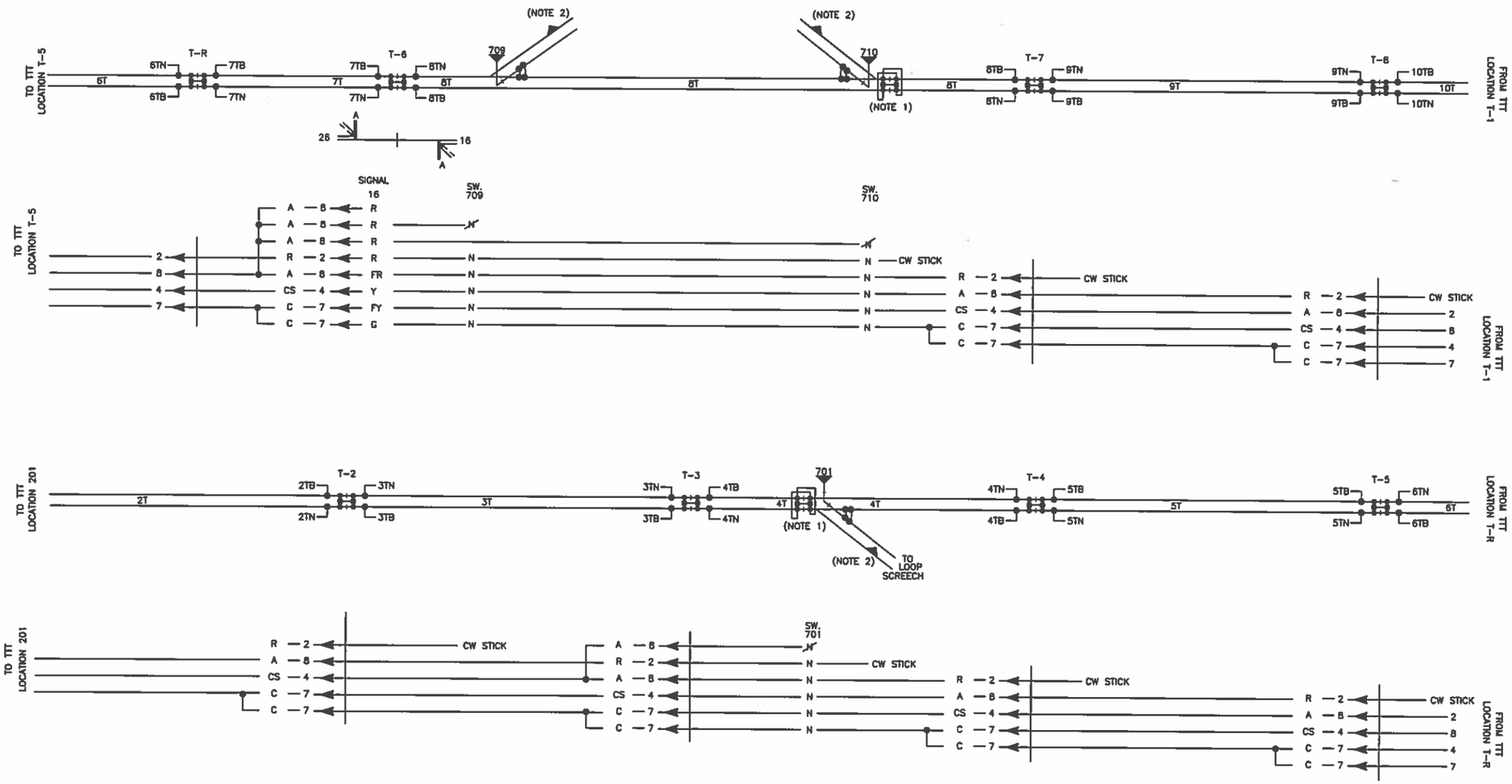

REV	DATE	DESCRIPTION
1	07/22/16	AS-IN SERVICE

ALSTOM
ALSTOM TRANSPORT INFORMATION SOLUTIONS

Designed By: BPC
Drawn By: BPC
Checked By: BDW
Approved By: AEB

TTCI

CLOCKWISE ASPECTS AT TTT INTERMEDIATE & HOLDOUT SIGNALS

Scale: NTS
CADD File Name: TTCI008.DWG
Submitted Date: 02/09/15
Sheet No. 008

TTT CAB RATE TABLE		
	DESIGNATOR	RATE
CLEAR	C	180
CAB SPEED	CS	270
APPROACH	A	75
RESTRICTING	R	NO CAB

NOTES:

1. THE INSULATED JOINTS AT THE HANDTHROW SWITCHES ARE BYPASSED ONLY WHEN THE SWITCH IS LOCKED IN THE NORMAL POSITION.
2. PERMANENT DERAILS REQUIRED AT FOULING POINT

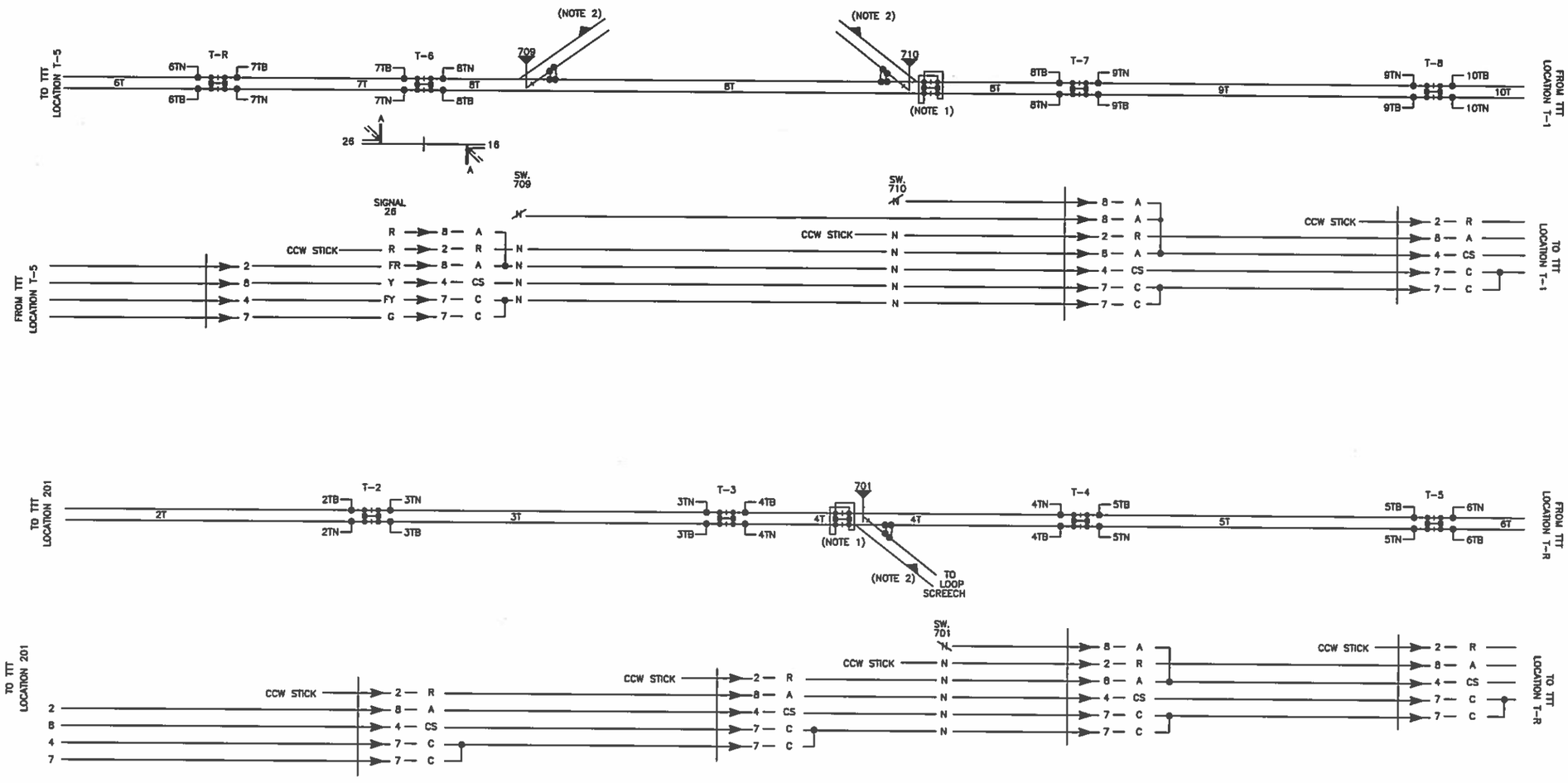

REV	DATE	DESCRIPTION
1	07/22/16	AS-IN SERVICE

ALSTOM
ALSTOM TRANSPORT INFORMATION SOLUTIONS

Designed By: BPC
Drawn By: BPC
Checked By: BDW
Approved By: AEB

TTCI

COUNTER CLOCKWISE ASPECTS AT TTT INTERMEDIATE & HOLDOUT SIGNALS

Scale: NTS
CADD File Name: TTCI009.DWG
Submitted Date: 02/09/15
Sheet No. 009

HOUSE 602

REV	DATE	DESCRIPTION
3	03/30/15	UPDATES AFTER TTCI SITE SURVEY/DESIGN REVIEW
2	03/17/15	UPDATED FOR TTT PROJECT
1	11/26/14	AS-IN SERVICE

GETS
Global Signaling

Designed By:	BDV
Drawn By:	SAT
Checked By:	RWL
Approved By:	AEB

TTCI

HOUSE 602

COVER SHEET

Scale:	NTS
CADD File Name:	602000.DWG
Submitted Date:	04/05/13
Sheet No.	000

INDEX OF DRAWINGS			
SHT. NO.	DWG. NO.	REV.	DESCRIPTION
000	602000.DWG	3	COVER SHEET
001	602001.DWG	3	INDEX
002	602002.DWG	3	TRACK & SIGNAL PLAN
003	602003.DWG	2	TRACK CIRCUITS
004	602004.DWG	1	SWITCH MACHINE CIRCUITS SW 302
005	602005.DWG	1	SWITCH MACHINE CIRCUITS SW 602A & 602B
006	602006.DWG	1	SWITCH MACHINE CIRCUITS SW 301
007	602007.DWG	1	COMMUNICATIONS
008	602008.DWG	1	POWER DISTRIBUTION CIRCUITS
009	602009.DWG	1	VHLC-VGPIO-SLOT 4
010	602010.DWG	1	VHLC-VGPIO-SLOT 5
010a	602010a.DWG	2	VHLC-CCI-SLOT 6
011	602011.DWG	1	VHLC CONFIGURATION
012	602012.DWG	3	RACK 1 LAYOUT
012a	602012a.DWG	1	CAB-X LAYOUT
013	602013.DWG	1	WAGO LAYOUT RACK 1, ROW A & B
013a	602013a.DWG	1	WAGO LAYOUT RACK 1, ROW AA & BB
014	602014.DWG	1	RELAY LAYOUT RACK 1, ROW J & K
015	602015.DWG	2	LOCAL CONTROL PANEL
016	602016.DWG	2	CONTROLS & INDICATIONS
017	602017.DWG	2	VITAL REMOTE NETWORKS

REV	DATE	DESCRIPTION
3	03/30/15	UPDATES AFTER TTCI SITE SURVEY/DESIGN REVIEW
2	03/17/15	UPDATED FOR TTT PROJECT
1	11/26/14	AS-IN SERVICE

GETS
Global Signaling

Designed By: BDV
Drawn By: SAT
Checked By: RWL
Approved By: AEB

TTCI

HOUSE 602

INDEX

Scale: NTS
CADD File Name: 602001.DWG
Submitted Date: 04/05/13
Sheet No. 001

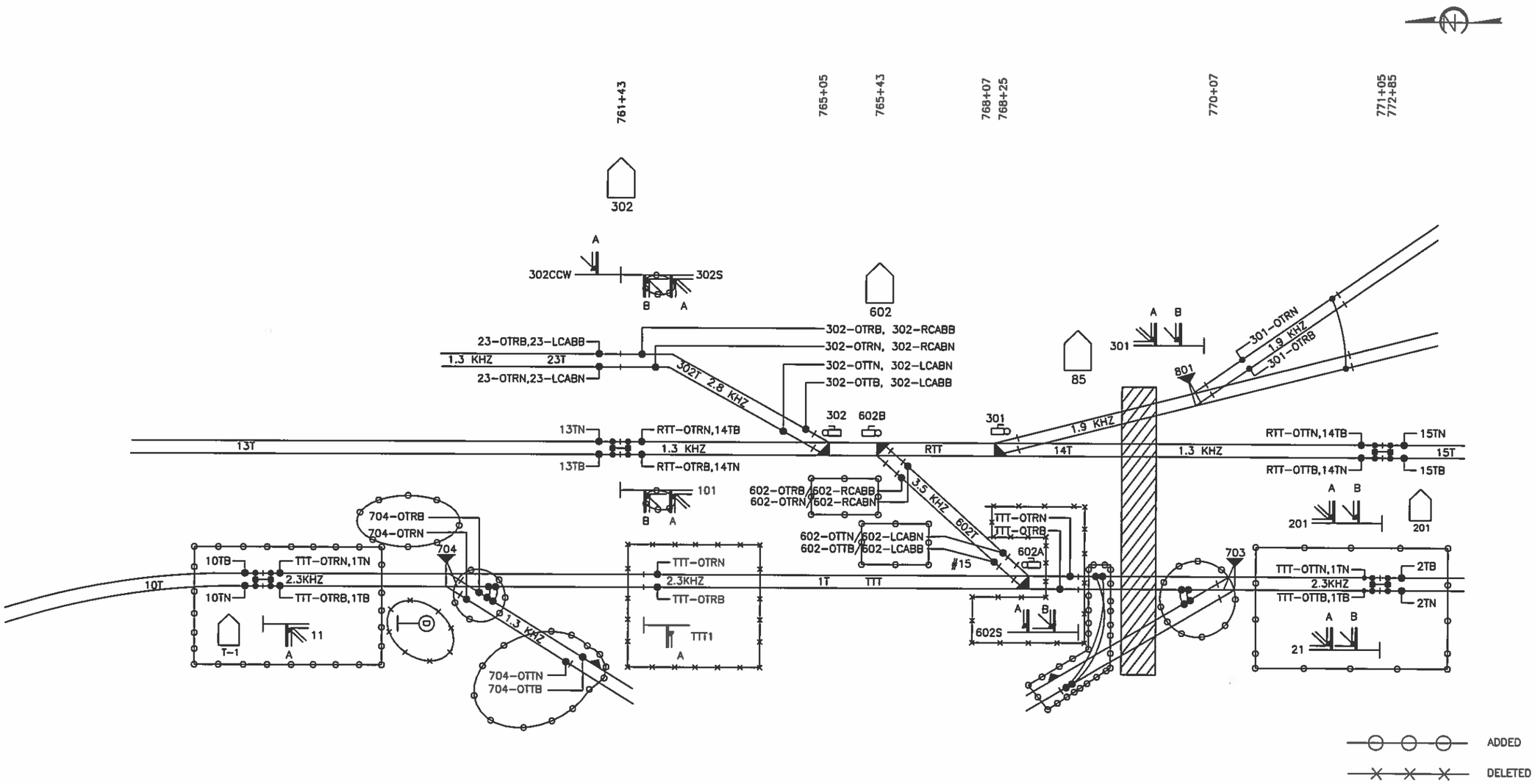

REV	DATE	DESCRIPTION
3	03/30/15	CHANGED 703 & 704 CIRCUITS
2	03/17/15	UPDATED FOR TTT SIGNALING PROJECT
1	11/26/14	AS-IN SERVICE

GETS
Global Signaling

Designed By: BDV
Drawn By: SAT
Checked By: RWL
Approved By: AEB

TTCI

HOUSE 602

TRACK & SIGNAL PLAN

Scale: NTS
CADD File Name: 602002.DWG
Submitted Date: 04/05/13
Sheet No. 002

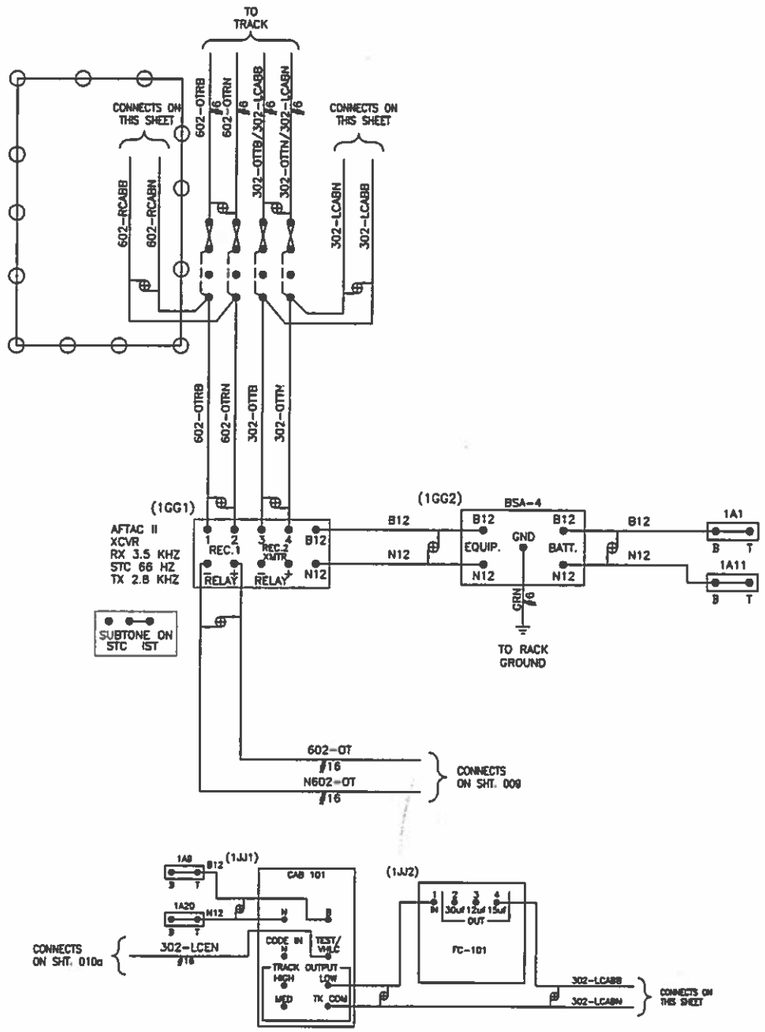

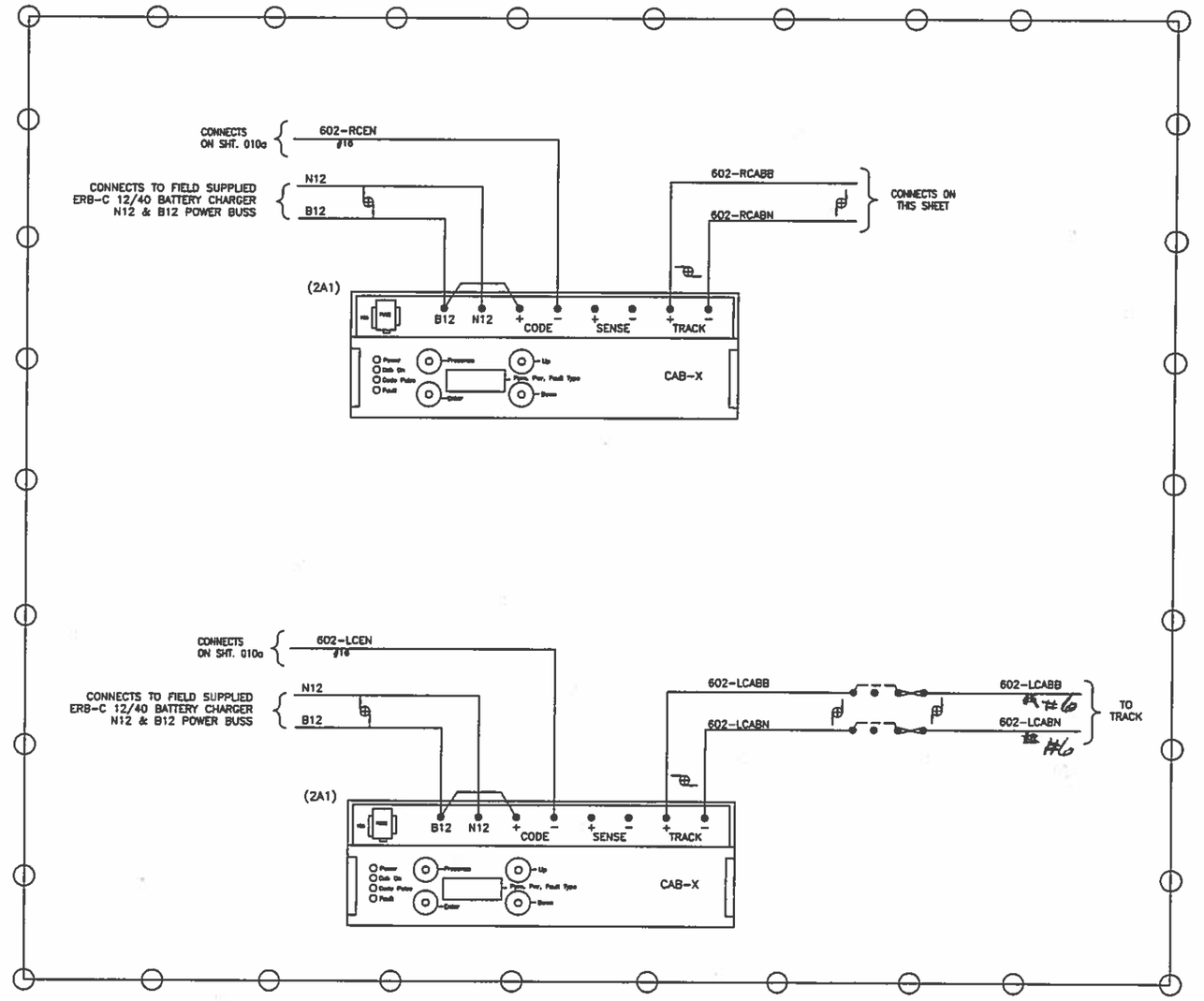

IN

OUT

NOTES:

1) ALL WIRING ON THIS SHEET TO BE #10 AWG UNLESS OTHERWISE NOTED.
2) ⊕ = TWISTED PAIR 2 TURNS PER FOOT.
3) ----- = INTERNAL CONNECTION
4) CAB-X EQUIPMENT SHOULD BE WALL OR SHELF MOUNTED.

REV	DATE	DESCRIPTION
2	03/17/15	ADDED CAB-X GENERATORS FOR 602-LCAB & 602-RCAB
1	11/26/14	AS-IN SERVICE

GETS
Global Signaling

Designed By:	BDV
Drawn By:	SAT
Checked By:	RWL
Approved By:	AEB

TTCI

HOUSE 602

TRACK CIRCUITS

Scale:	NTS
CADD File Name:	602003.DWG
Submitted Date:	04/05/13
Sheet No.	003

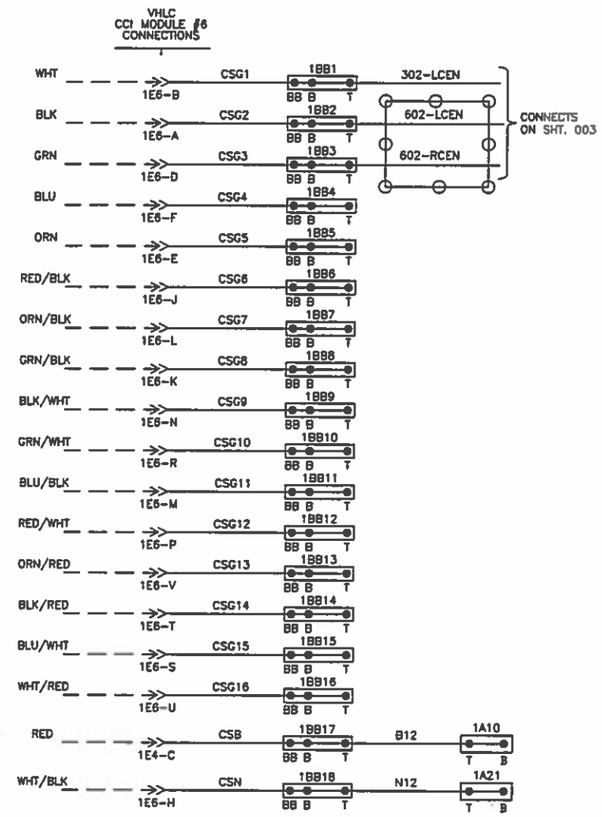

ADDED

DELETED

NOTES:

1) ALL WIRING ON THIS SHEET TO BE #16 AWG UNLESS OTHERWISE NOTED.
2) # = LOWER CASE LETTER.

REV	DATE	DESCRIPTION
2	03/17/15	ADDED 602-LCEN & 602-RCEN
1	11/26/14	AS-IN SERVICE

GETS
Global Signaling

Designed By:	BPC
Drawn By:	SAT
Checked By:	BDV
Approved By:	AEB

TTCI

HOUSE 602

VHLC-CCI-SLOT 6

Scale:	NTS
CADD File Name:	602010a.DWG
Submitted Date:	04/18/14
Sheet No.	010a

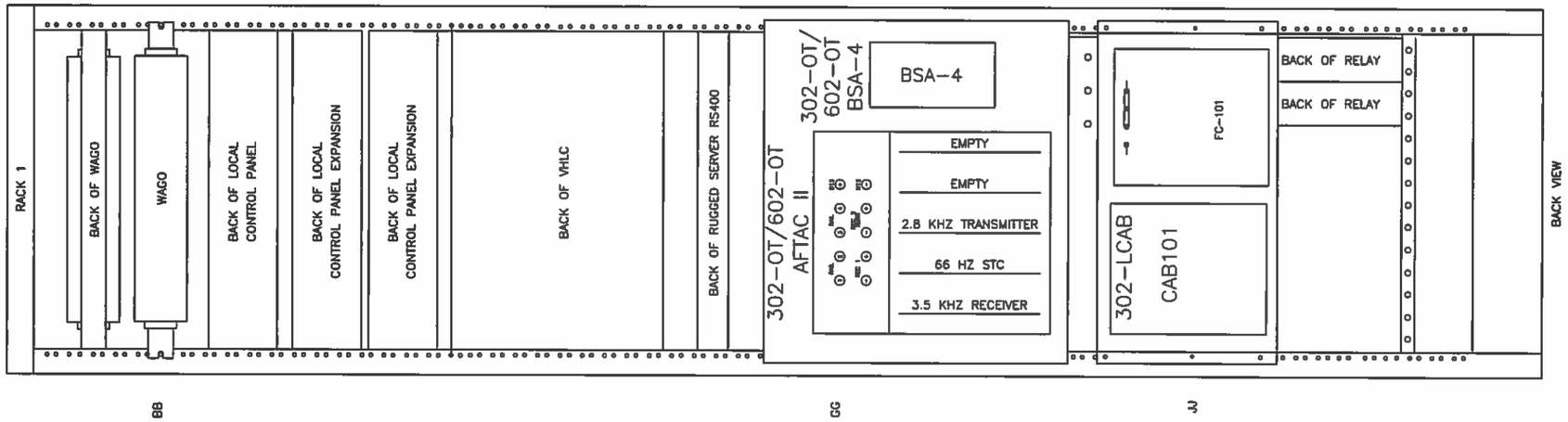

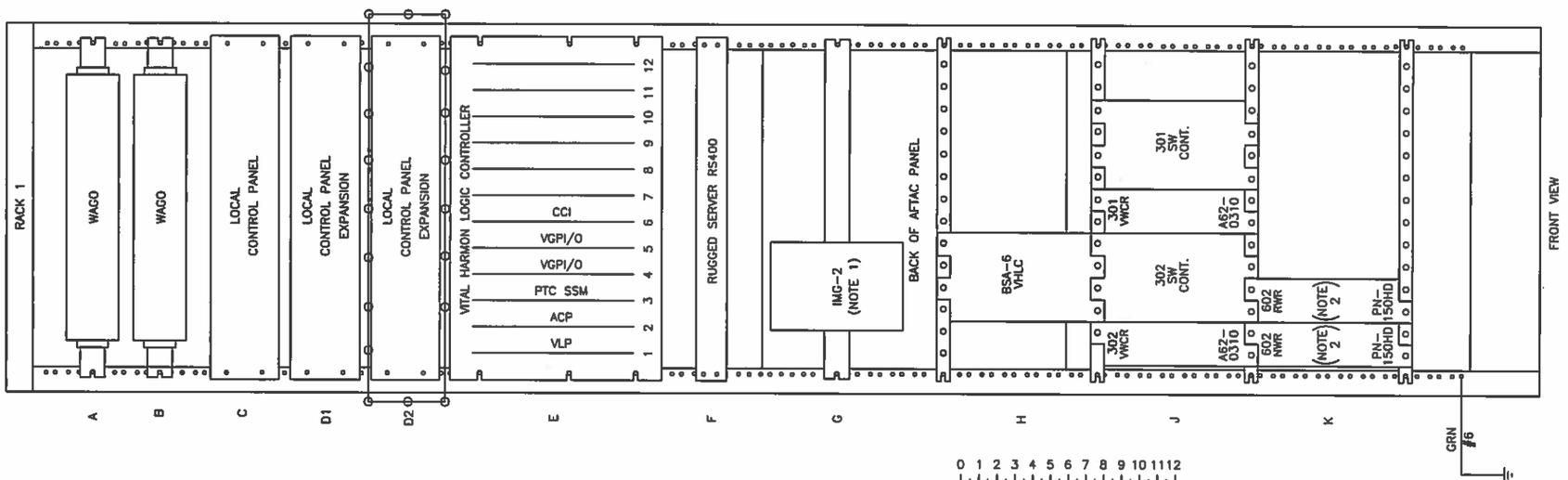

0 1 2 3 4 5 6 7 8 9 10 11 12

INCHES

ADDED

DELETED

NOTES:

1) FIELD SUPPLIED
2) US&S RELAYS TO BE MOUNTED ON SAFTRAN RELAY MOUNTING BARS. SOME MODIFICATIONS MAY BE NECESSARY FOR FIELD INSTALLATION.

REV	DATE	DESCRIPTION
3	03/30/15	CORRECTED BACK VIEW TO SHOW NEW LCP EXPANSION PANEL
2	03/11/15	ADDED LCP EXPANSION PANEL FOR TTT PROJECT
1	11/26/14	AS-IN SERVICE

GETS
Global Signaling

Designed By: BDV
Drawn By: SAT
Checked By: RWL
Approved By: AEB

TTCI

HOUSE 602

RACK 1 LAYOUT

Scale: NTS
CADD File Name: 602012.DWG
Submitted Date: 04/05/13
Sheet No. 012

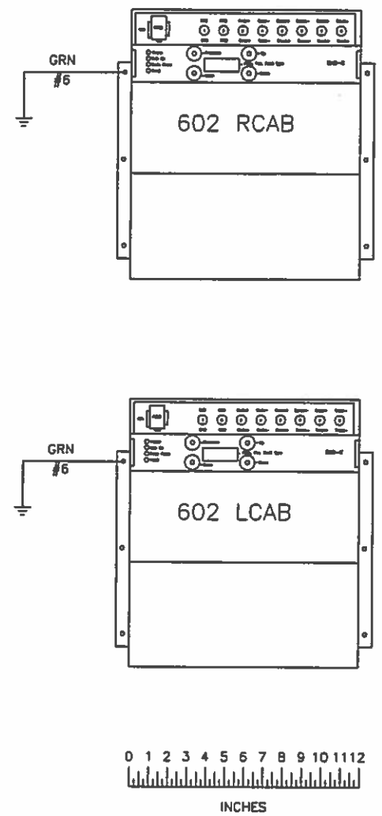

NEW SHEET

NOTES:
1) EQUIPMENT MAY BE WALL OR SHELF MOUNTED.

REV	DATE	DESCRIPTION
1	03/17/15	AS-DESIGNED FOR TTT PROJECT

GETS
Global Signaling

Designed By:	BPC
Drawn By:	BPC
Checked By:	BDW
Approved By:	AEB

TTCI

HOUSE 602

CAB-X LAYOUT

Scale:	NTS
CADD File Name:	602012a.DWG
Submitted Date:	03/17/15
Sheet No.	012a

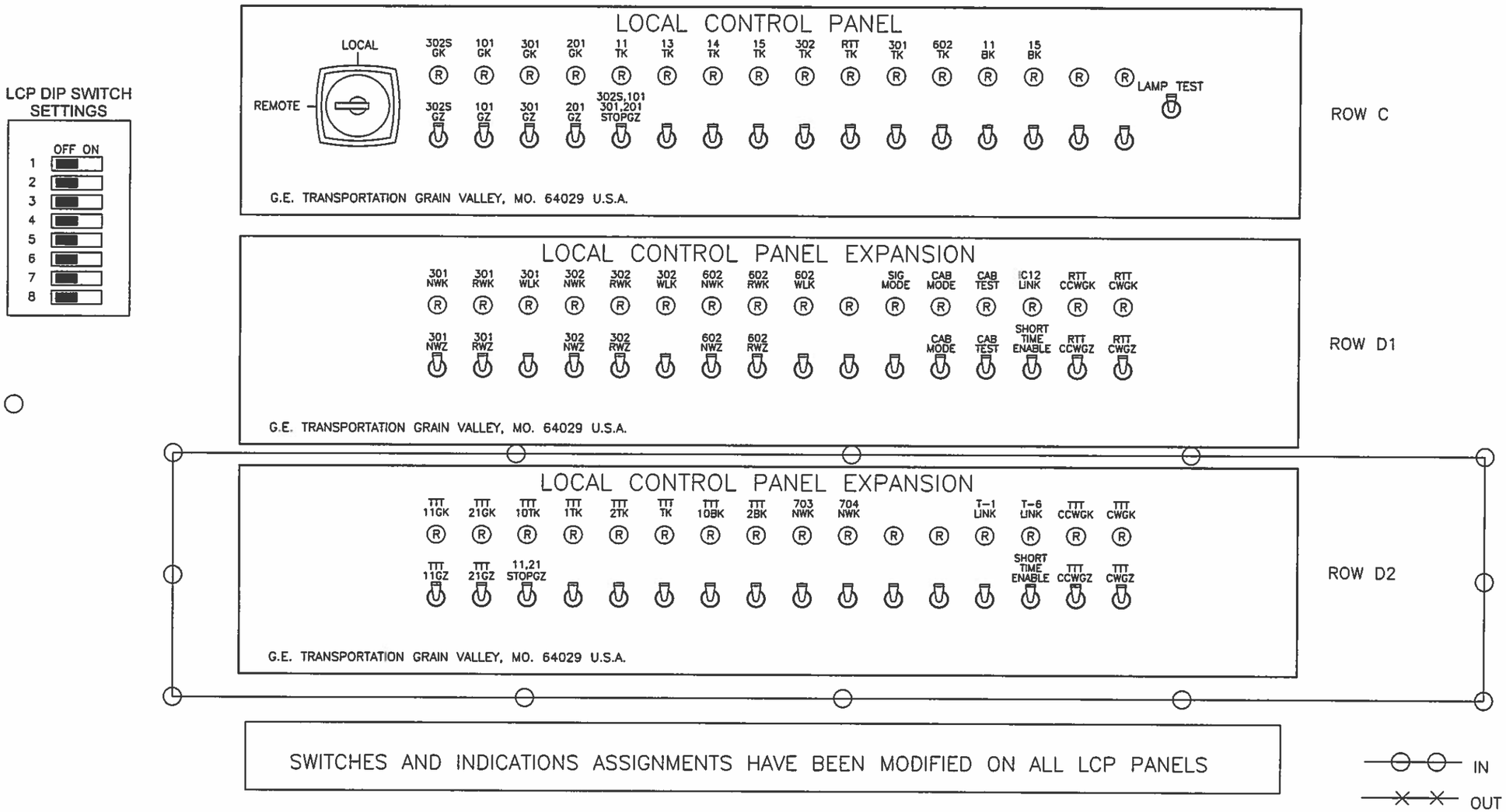

REV	DATE	DESCRIPTION
2	3/17/15	ADDED PANEL D2 & MODIFIED ASSIGNMENTS ON ALL PANELS
1	11/26/14	AS-IN SERVICE

GETS
Global Signaling

Designed By:	BDV
Drawn By:	SAT
Checked By:	RWL
Approved By:	AEB

TTCI

HOUSE 602

LOCAL CONTROL PANEL

Scale:	NTS
CADD File Name:	602015.DWG
Submitted Date:	04/05/13
Sheet No.	015

CODE ASSIGNMENTS								
CONTROLS								
	BIT 1	BIT 2	BYTE 3	BYTE 4	BYTE 5	BYTE 6	BYTE 7	BYTE 8
BYTE 1	H302NWZ	H302RWZ	H602NWZ	H602RWZ	H301NWZ	H301RWZ	H1ENGZ	H1WSGZ
BYTE 2	H2ENGZ	H2WSGZ	HCCWGZ	HCWGZ	HCABTZ	HCABMZ	HCABSTOP	*H2CCWGZ
BYTE 3	*H2CWGZ	*H11GZ	*H21GZ	*HTTTSTOP				
INDICATIONS								
	BIT 1	BIT 2	BIT 3	BIT 4	BIT 5	BIT 6	BIT 7	BIT 8
BYTE 1	H302NWK	H302RWK	H602NWK	H602RWK	H301NWK	H301RWK	H1ENGK	H1ENTENK
BYTE 2	H1WSGK	H1WSTENK	H2ENGK	H2ENTENK	H2WSGK	H2WSTENK	H13TTK	H1TK
BYTE 3	H2TK	H15TTK	H15TAK	HCCWK	HCWK	H703NWK	H704NWK	HLOCAL
BYTE 4	HCABTK	HCABMODK	HSIGMODK	H12LINK	*HT1LINK	*HT6LINK	*HTTTCCWK	*HTTTCWK
BYTE 4	*HT10TK	*HTZTK						

NEW CONTROLS AND INDICATIONS ADDED FOR THE TTT SIGNALING PROJECT ARE SHOWN WITH AN * IN FROM OF THE NAME.

REV	DATE	DESCRIPTION
2	03/17/15	ADDED CONTROLS & INDICATIONS FOR TTT SIGNALING PROJECT.
1	11/26/14	AS-IN SERVICE

GETS
Global Signaling

Designed By: BDV
Drawn By: SAT
Checked By: RWL
Approved By: AEB

TTCI

HOUSE 602

LOCALS & INDICATIONS

Scale: NTS
CADD File Name: 602016.DWG
Submitted Date: 09/30/13
Sheet No. 016

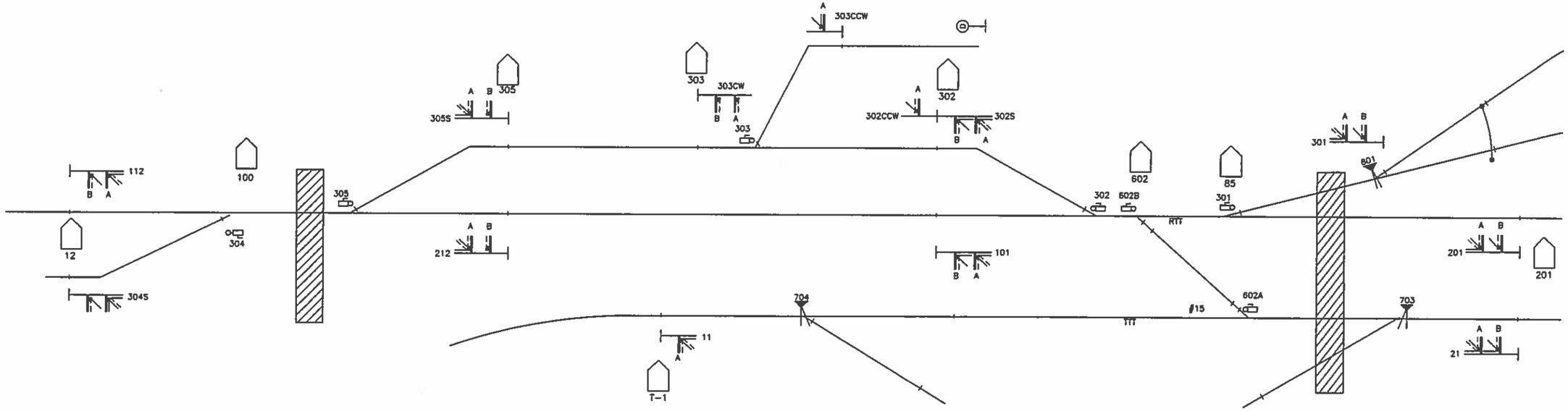

HOUSE 12

RACK 1	
IP ADDRESS: 192.168.40.11	
REMOTE 1	
RP2000 PORT	8280
NETWORK ID	10
REMOTE 2	
RP2000 PORT	8281
NETWORK ID	11
REMOTE 3	
RP2000 PORT	8282
NETWORK ID	12
REMOTE 4	
RP2000 PORT	8288
NETWORK ID	13
REMOTE 5	
RP2000 PORT	8285
NETWORK ID	14

TO HOUSE < 248

POST 100

RACK 1	
IP ADDRESS: 192.168.40.13	
REMOTE 1	
RP2000 PORT	8280
NETWORK ID	4

HOUSE 305

RACK 1	
IP ADDRESS: 192.168.40.15	
REMOTE 1	
RP2000 PORT	8281
NETWORK ID	5

HOUSE 302

RACK 1	
IP ADDRESS: 192.168.40.18	
REMOTE 1	
RP2000 PORT	8283
NETWORK ID	770
REMOTE 2	
RP2000 PORT	8282
NETWORK ID	119
REMOTE 3	
RP2000 PORT	8287
NETWORK ID	15

HOUSE 303

RACK 1	
IP ADDRESS: 192.168.40.12	
REMOTE 1	
RP2000 PORT	8285
NETWORK ID	6
REMOTE 2	
RP2000 PORT	8286
NETWORK ID	7

RACK 2	
IP ADDRESS: 192.168.40.17	
REMOTE 1	
RP2000 PORT	8286
NETWORK ID	8
REMOTE 2	
RP2000 PORT	8287
NETWORK ID	9

HOUSE 602

RACK 1	
RS400 IP ADDRESS: 192.168.40.16	
RP2000 PORT	8283
NETWORK ID	16
RAW SOCKET	COM 2
VHLC RS232 PORT	B
RP2000 PORT	8284
NETWORK ID	16
RAW SOCKET	COM 4
VHLC RS232 PORT	D

HOUSE T-1

RACK 1	
IP ADDRESS: 192.168.40.71	
REMOTE 1	
RP2000 PORT	8290
NETWORK ID	71

HOUSE 201

RACK 1	
IP ADDRESS: 192.168.40.14	
REMOTE 1	
RP2000 PORT	8284
NETWORK ID	513
REMOTE 2	
RP2000 PORT	8290
NETWORK ID	18
REMOTE 3	
RP2000 PORT	8291
NETWORK ID	19

HOUSE T-6

RACK 1	
IP ADDRESS: 192.168.40.76	
REMOTE 1	
RP2000 PORT	8291
NETWORK ID	76

ADDED

DELETED

REV	DATE	DESCRIPTION
2	03/17/15	ADDED HOUSES T-1 AND T-6
1	11/26/14	AS-IN SERVICE

GETS Global Signaling

Designed By: BPC
Drawn By: SAT
Checked By: BDV
Approved By: AEB

TTCI

HOUSE 602

VITAL REMOTE NETWORKS

Scale: NTS
CADD File Name: 602017.DWG
Submitted Date: 04/21/14
Sheet No. 017

HOUSE 201

REV	DATE	DESCRIPTION
3	03/30/15	UPDATES AFTER TTCI SITE SURVEY/DESIGN REVIEW
2	03/19/15	UPDATED FOR TTT PROJECT
1	11/26/14	AS-IN SERVICE

GETS
Global Signaling

Designed By:	BDV
Drawn By:	SAT
Checked By:	RWL
Approved By:	AEB

TTCI

HOUSE 201

COVER SHEET

Scale:	NTS
CADD File Name:	201000.DWG
Submitted Date:	04/03/13
Sheet No.	000

INDEX OF DRAWINGS			
SHT. NO.	DWG. NO.	REV.	DESCRIPTION
000	201000.DWG	3	COVER SHEET
001	201001.DWG	3	INDEX
002	201002.DWG	3	TRACK & SIGNAL PLAN
003	201003.DWG	2	CODE & ASPECT CHART
004	201004.DWG	3	RTT TRACK CIRCUITS
004a	201004a.DWG	1	TTT TRACK CIRCUITS
005	201005.DWG	2	SIGNAL LIGHTING CIRCUITS
006	201006.DWG	1	COMMUNICATIONS
007	201007.DWG	1	POWER DISTRIBUTION CIRCUITS RACK 1
007a	201007a.DWG	1	POWER DISTRIBUTION CIRCUITS RACK 2
008	201008.DWG	3	ELECTROLOGIXS 4-SLOT MODULE CONNECTOR USAGE
009	201009.DWG	2	ELECTROLOGIXS 4-SLOT HARDWARE CONFIGURATION
010	201010.DWG	2	ELECTROLOGIXS 4-SLOT CONFIGURATION SETTINGS
011	201011.DWG	2	RACK 1 LAYOUT
011a	201011a.DWG	2	RACK 2 LAYOUT
012	201012.DWG	1	WAGO & RELAY LAYOUT RACK 1, ROW A & B
012a	201012a.DWG	1	WAGO & RELAY LAYOUT RACK 2, ROW A
013	201013.DWG	2	VITAL REMOTE NETWORKS

REV	DATE	DESCRIPTION
3	03/30/15	UPDATES AFTER TTCI SITE SURVEY/DESIGN REVIEW
2	3/19/15	UPDATED FOR TTT SIGNALING PROJECT
1	11/26/14	AS-IN SERVICE

GETS Global Signaling

Designed By: BDV
Drawn By: SAT
Checked By: RWL
Approved By: AEB

TTCI

HOUSE 201

INDEX

Scale: NTS
CADD File Name: 201001.DWG
Submitted Date: 04/03/13
Sheet No. 001

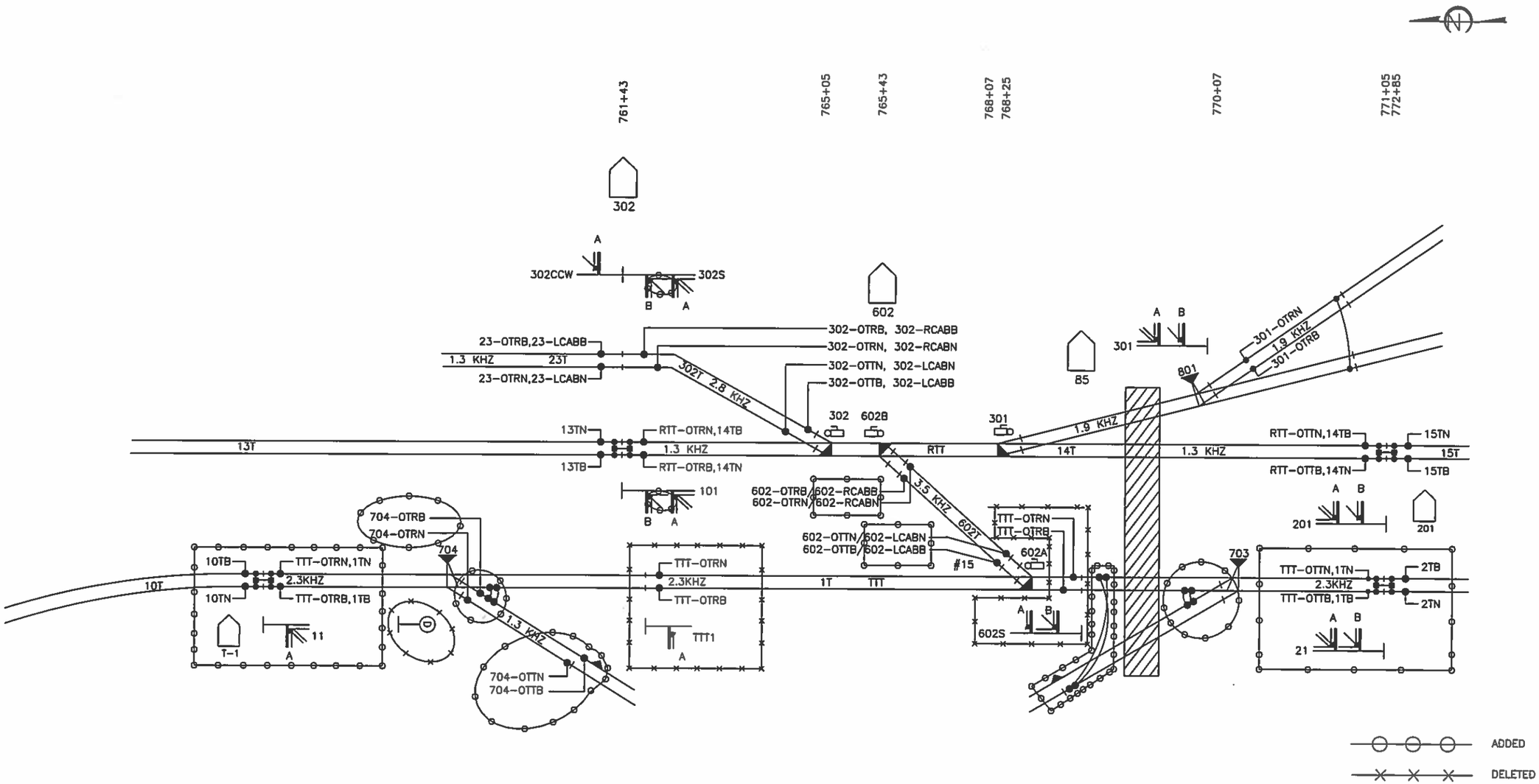

REV	DATE	DESCRIPTION
3	03/30/15	CHANGED 703 & 704 CIRCUITS
2	03/17/15	UPDATED FOR TTT SIGNALING PROJECT
1	11/26/14	AS-IN SERVICE

GETS
Global Signaling

Designed By: BDV
Drawn By: SAT
Checked By: RWL
Approved By: AEB

TTCI

HOUSE 201

TRACK & SIGNAL PLAN

Scale: NTS
CADD File Name: 201002.DWG
Submitted Date: 06/03/14
Sheet No. 002

LAMP OUT DOWNGRADES FOR 21					
CODE IN	LAMP OUT	ASPECT	PTC	CODE OUT	CAB OUT
7	TOP G	FY/R	6	7	180
2,4,7,8	TOP G & Y	FR/R	13	8	75
2,4,7,8	ALL TOP	D/FR	13	8	75
7	BOTTOM R	G/D	3	7	180
4	BOTTOM R	FY/D	6	7	180
8	BOTTOM R	Y/D	6	4	270
2	BOTTOM R	FR/D	6	8	75
CW STICK	BOTTOM R	R/D	8	2	NO CAB
*NO CODE	TOP R	D/R	15	8	75
*NO CODE	BOTTOM R	R/D	15	8	75
DIVERGING 7	BOTTOM G	R/FY	11	7	120
DIVERGING 7,3,4,8,9	BOTTOM G & Y	R/FR	13	8	120
DIVERGING 8,9	TOP R	D/FR	13	8	120
DIVERGING 8,9	BOTTOM R	FR/D	13	8	120
ALL CODES	ALL TOP & BOTTOM	D/D	30	8	75/–

* OR SIGNAL AT STOP

LAMP OUT DOWNGRADES FOR 602S				
CODE IN	LAMP OUT	ASPECT	PTC	CODE OUT
7	BOTTOM G	R/FY	11	–
3,4,7,8,9	BOTTOM G & Y	R/FR	13	–
3,4,7,8,9	ALL BOTTOM	FR/D	13	–
3,4,7,8,9	TOP R	D/FR	13	–
*NO CODE	BOTTOM R	R/D	15	–
*NO CODE	TOP R	D/R	15	–
DIVERGING	BOTTOM R	FR/D	13	–
DIVERGING	TOP R	D/FR	13	–
ALL CODES	ALL TOP & BOTTOM	D/D	30	–

* OR SIGNAL AT STOP

LAMP OUT DOWNGRADES FOR 201					
CODE IN	LAMP OUT	ASPECT	PTC	CODE OUT	CAB OUT
7	TOP G	FY/R	6	7	180/–
3,4,7,8,9	TOP G & Y	FR/R	13	8	75/–
3,4,7,8,9	ALL TOP	D/FR	13	8	75/–
7	BOTTOM R	G/D	3	7	180/180
8	BOTTOM R	Y/D	8	3	270/–
3	BOTTOM R	FY/D	6	4	120/120
4	BOTTOM R	FY/D	6	7	180/–
9	BOTTOM R	Y/D	8	3	270/–
*NO CODE	TOP R	D/R	15	8	75/–
*NO CODE	BOTTOM R	R/D	15	8	75/–
DIVERGING 8	BOTTOM Y	R/FR	13	9	75/75
DIVERGING 8,9	TOP R	D/FR	13	9	75/75
DIVERGING 8,9	BOTTOM R	FR/D	13	9	75/75
ALL CODES	ALL TOP & BOTTOM	D/D	30	8	75/–

* OR SIGNAL AT STOP

LAMP OUT DOWNGRADES FOR 301				
CODE IN	LAMP OUT	ASPECT	PTC	CODE OUT
7	TOP G	FY/R	6	–
3,4,7,8,9	TOP G & Y	FR/R	13	–
3,4,7,8,9	ALL TOP	D/FR	13	–
7	BOTTOM R	G/D	3	–
8	BOTTOM R	Y/D	8	–
3	BOTTOM R	FY/D	6	–
4	BOTTOM R	FY/D	6	–
9	BOTTOM R	Y/D	8	–
*NO CODE	TOP R	D/R	15	–
*NO CODE	BOTTOM R	R/D	15	–
DIVERGING 8	BOTTOM Y	R/FR	13	
DIVERGING 8,9	TOP R	D/FR	13	–
DIVERGING 8,9	BOTTOM R	FR/D	13	–
ALL CODES	ALL TOP & BOTTOM	D/D	30	–

* OR SIGNAL AT STOP

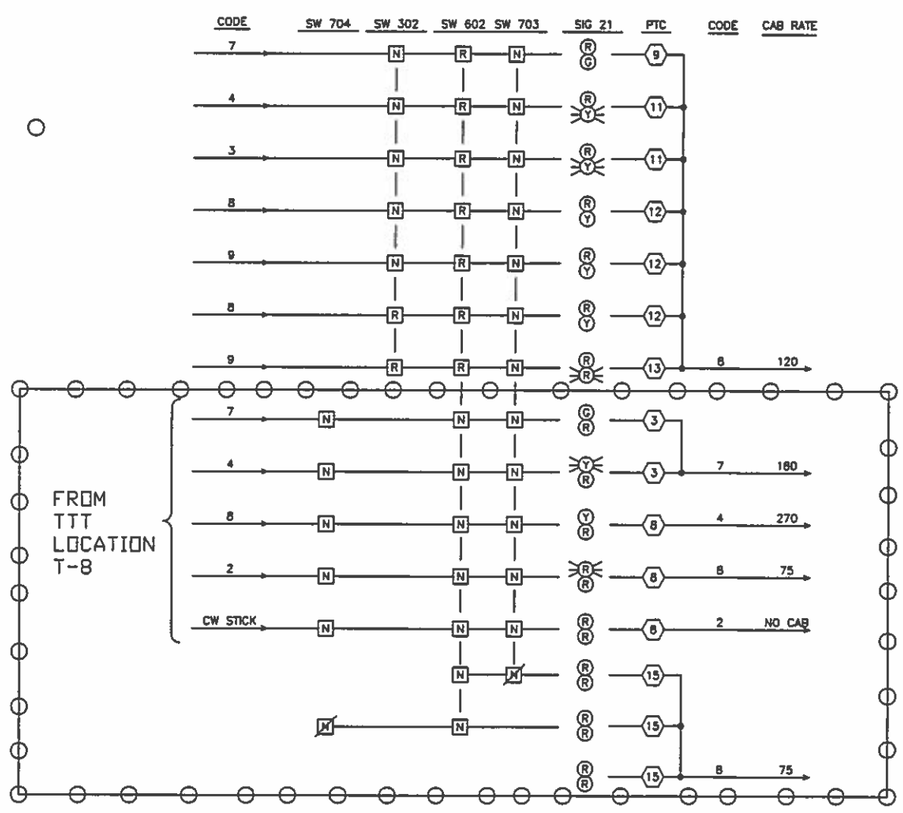

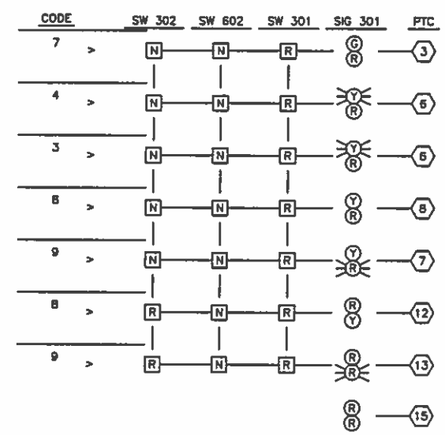

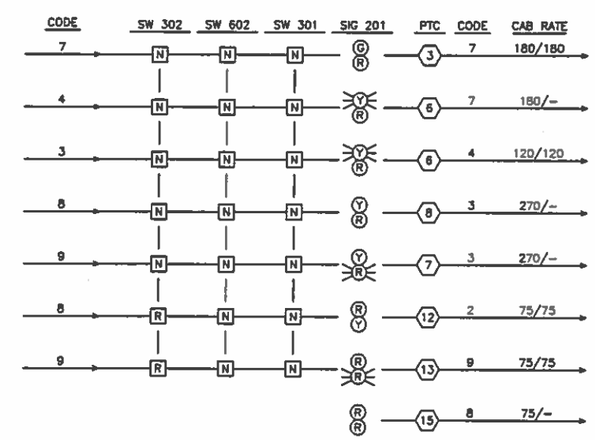

RTT CAB RATE TABLE		
	DESIGNATOR	RATE
CLEAR (150)	C150	180/180
CLEAR (125)	C125	180/–
CAB SPEED (80)	CS80	120/120
CAB SPEED (60)	CS60	270/–
APPROACH MEDIUM (?)	AM?	75/75
APPROACH LIMITED (?)	AL?	120/–
APPROACH	A	75/–

TTT CAB RATE TABLE		
	DESIGNATOR	RATE
CLEAR (80)	C	180
CAB SPEED	CS	270
APPROACH LIMITED (?)	AL?	120
APPROACH	A	75
RESTRICTING	R	NO CAB

ADDED

DELETED

NOTES:

N – SWITCH IN NORMAL POSITION

R – SWITCH IN REVERSE POSITION

REV	DATE	DESCRIPTION
2	03/19/15	UPDATED FOR TTT SIGNALING PROJECT
1	11/26/14	AS-IN SERVICE

GETS Global Signaling

Designed By: BDV
Drawn By: SAT
Checked By: RWL
Approved By: AEB

TTCI

HOUSE 201

CODE & ASPECT CHART

Scale: NTS
CADD File Name: 201003.DWG
Submitted Date: 04/03/13
Sheet No. 003

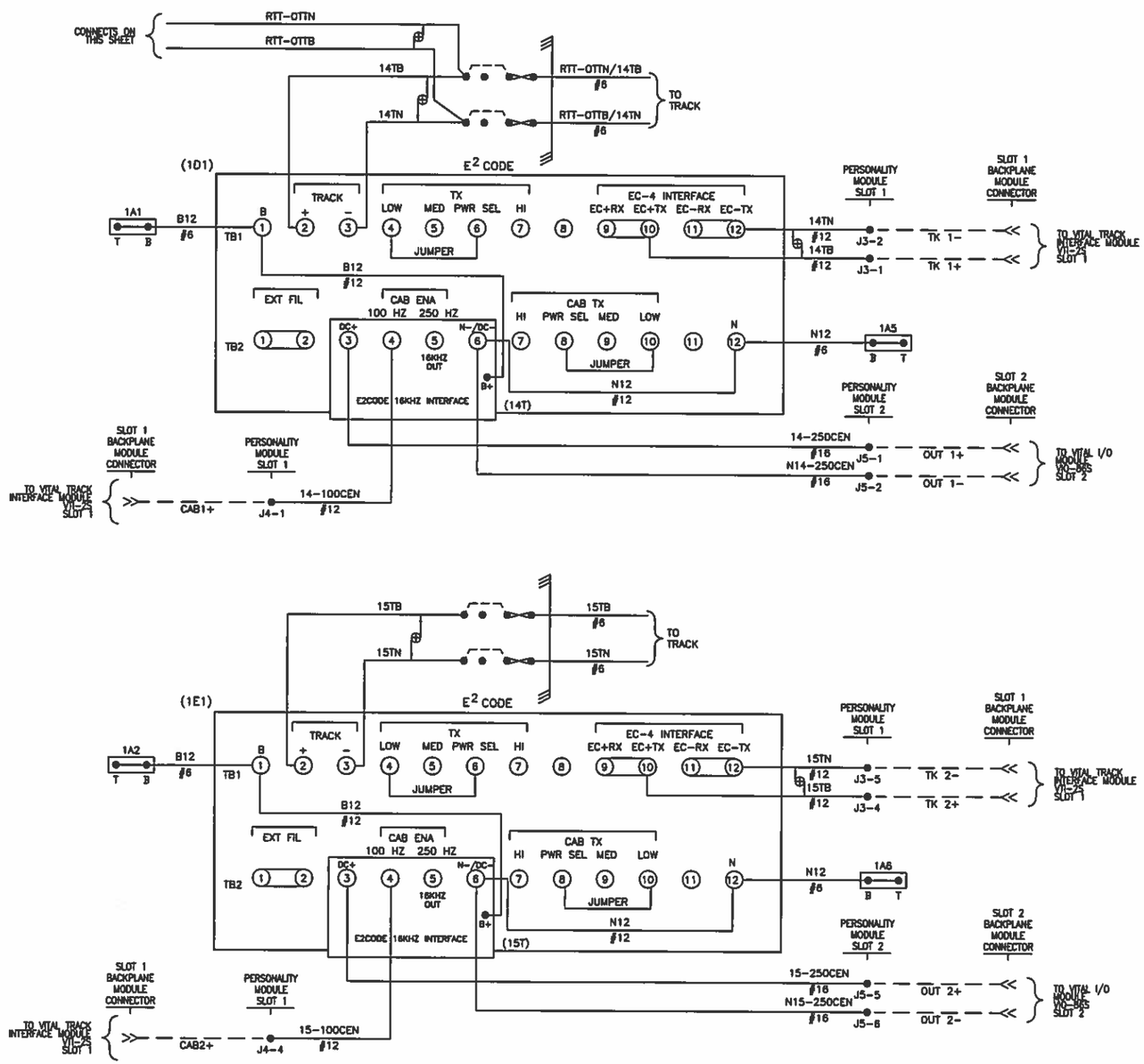

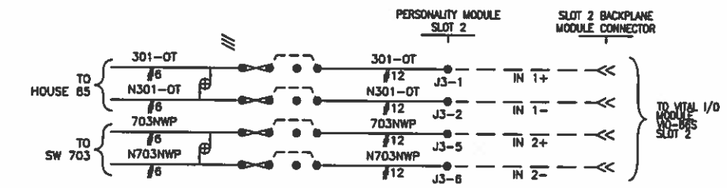

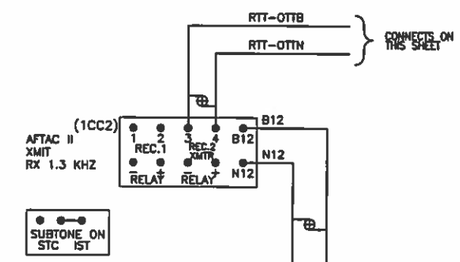

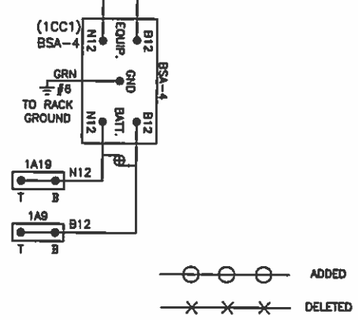

NOTES:

1) ALL WIRING ON THIS SHEET TO BE #10 AWG UNLESS OTHERWISE NOTED.
2) = TWISTED PAIR 2 TURNS PER FOOT.
3) ----- = INTERNAL CONNECTION

REV	DATE	DESCRIPTION
3	03/30/15	DELETED 703-OT CIRCUIT; SHUNT FOULING WILL BE USED
2	03/19/15	ADDED 703 TURNOUT AFTAC II INPUT
1	11/26/14	AS-IN SERVICE

GETS
Global Signaling

Designed By: BDV
Drawn By: SAT
Checked By: RWL
Approved By: AEB

TTCI

HOUSE 201

RTT TRACK CIRCUITS

Scale: NTS
CADD File Name: 201004.DWG
Submitted Date: 04/03/13
Sheet No. 004

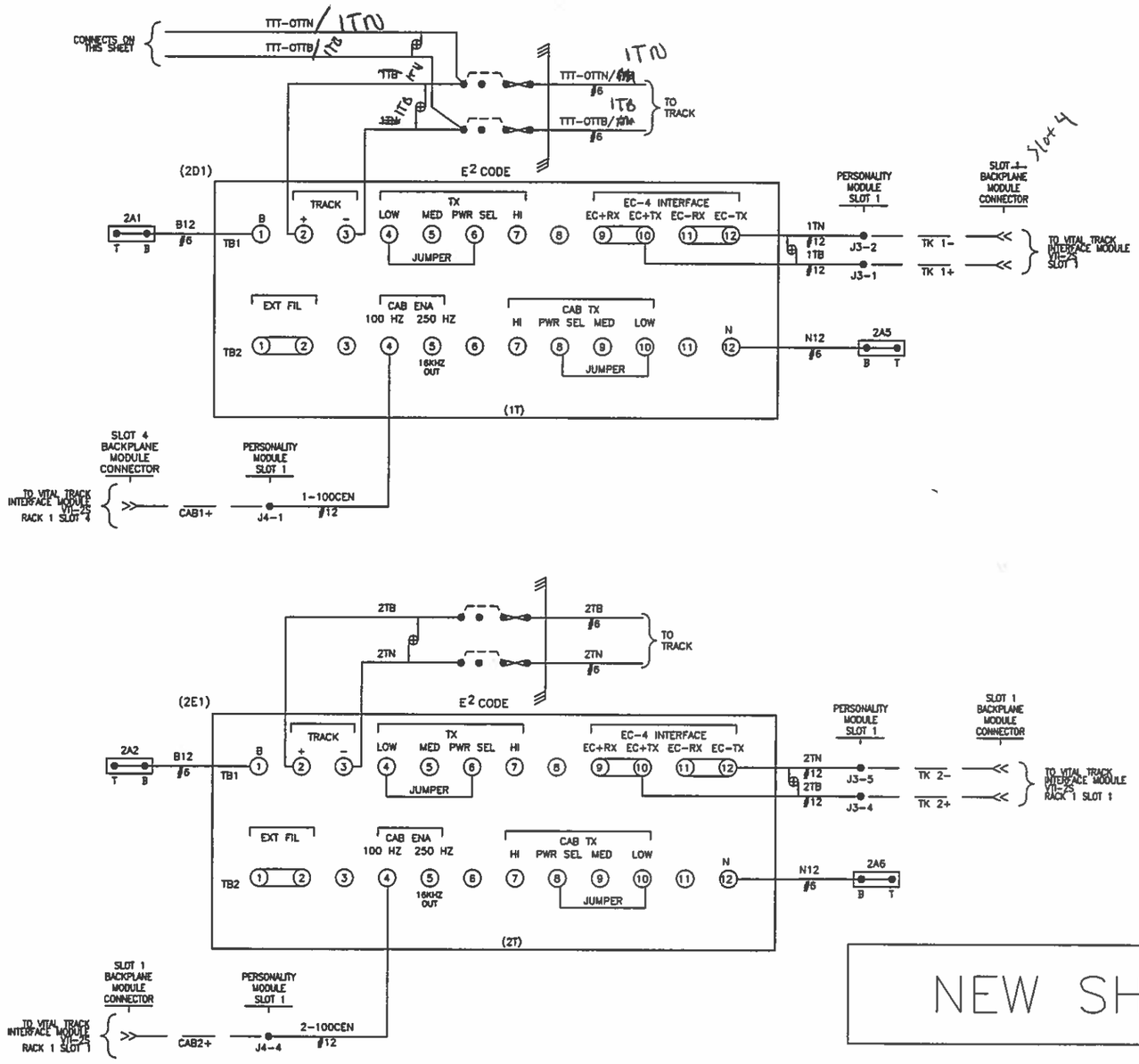

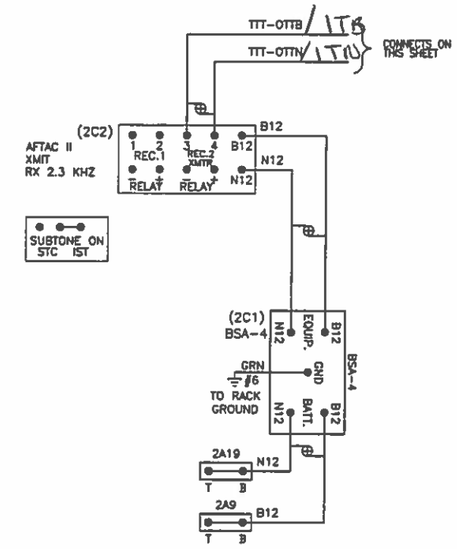

NEW SHEET

NOTES:

1) ALL WIRING ON THIS SHEET TO BE #10 AWG UNLESS OTHERWISE NOTED.
2) = TWISTED PAIR 2 TURNS PER FOOT.
3) ---- = INTERNAL CONNECTION

REV	DATE	DESCRIPTION
1	03/19/15	NEW TRACK CIRCUITS FOR TTT PROJECT

GETS Global Signaling

Designed By:	BPC
Drawn By:	BPC
Checked By:	BDW
Approved By:	AEB

TTCI

HOUSE 201

TTT TRACK CIRCUITS

Scale:	NTS
CADD File Name:	201004a.DWG
Submitted Date:	03/19/15
Sheet No.	004a

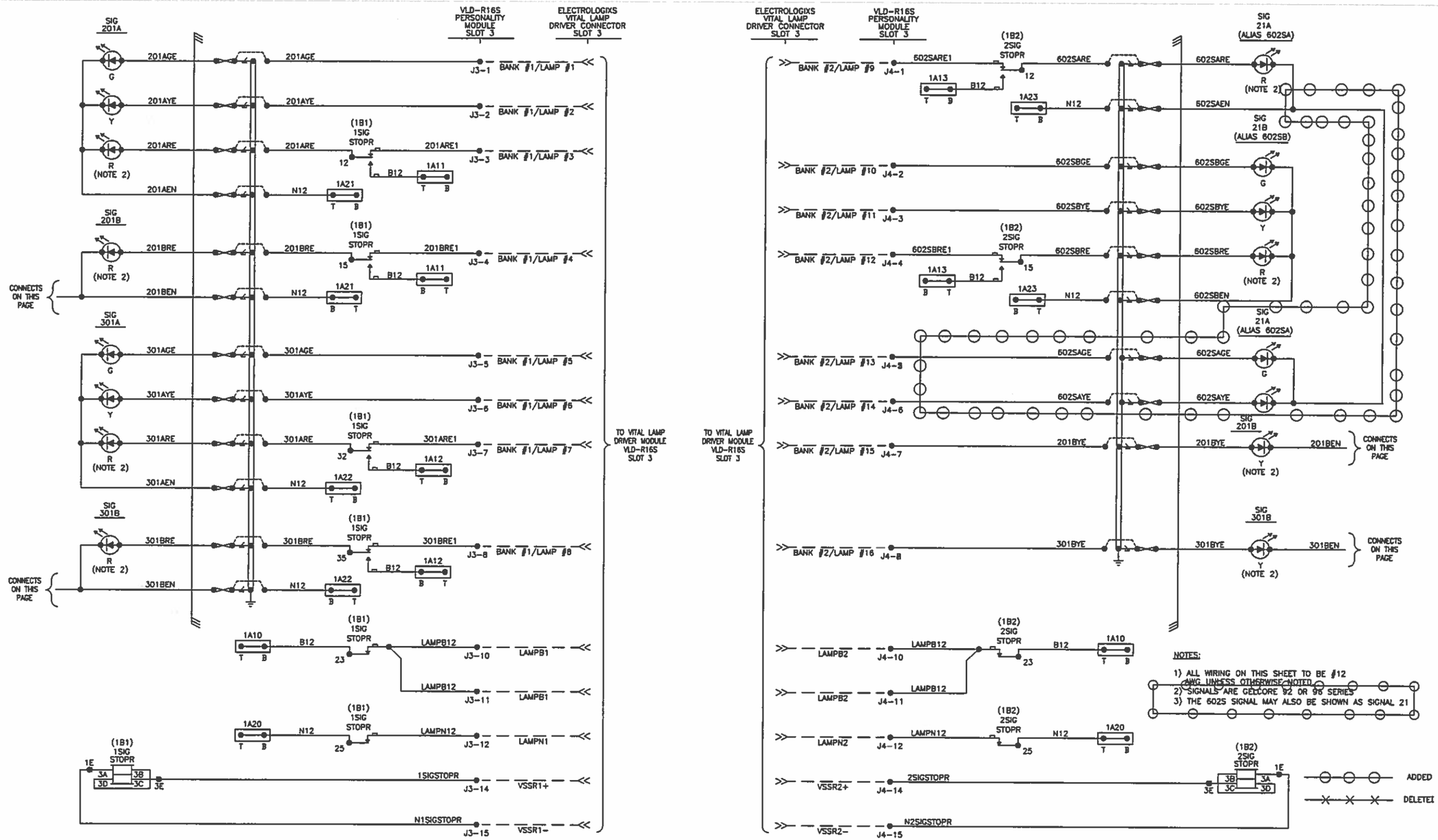

REV	DATE	DESCRIPTION
2	03/19/15	ADDED GREEN AND YELLOW A HEAD SIGNALS TO SIG 21A
1	11/26/14	AS-IN SERVICE

GETS Global Signaling

Designed By:	BDV
Drawn By:	SAT
Checked By:	RWL
Approved By:	AEB

TTCI

HOUSE 201

SIGNAL LIGHTING CIRCUITS

Scale:	NTS
CADD File Name:	201005.DWG
Submitted Date:	04/03/13
Sheet No.	005

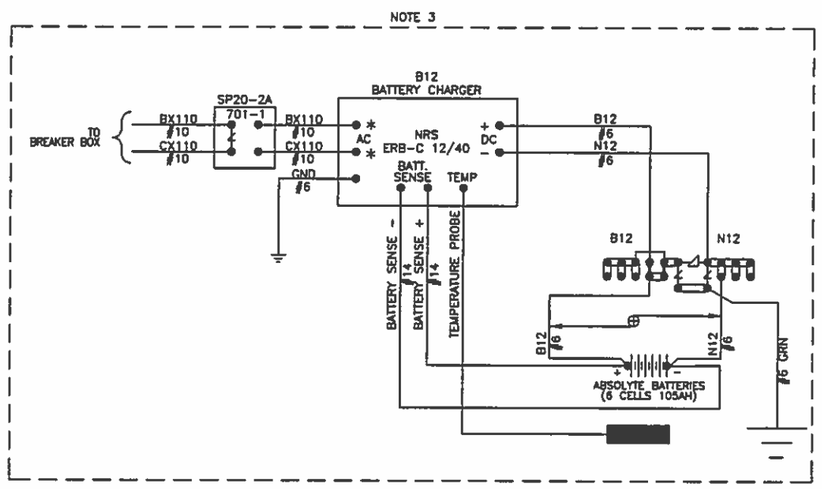

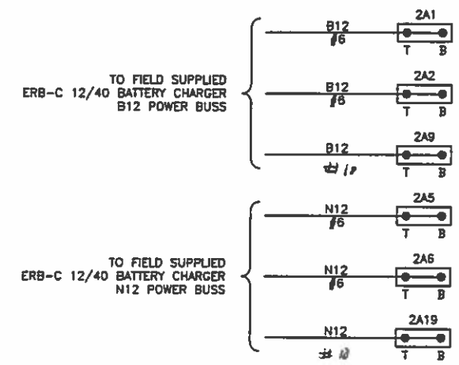

NEW SHEET

NOTES:

1) ALL SIGNAL WIRING ON THIS SHEET TO BE #10 AWG UNLESS OTHERWISE NOTED.
2) = TWISTED PAIR 2 TURNS PER FOOT.
3) FIELD SUPPLIED

REV	DATE	DESCRIPTION
1	03/19/15	AS-DESIGNED FOR TTT PROJECT

GETS
Global Signaling

Designed By:	BPC
Drawn By:	BPC
Checked By:	BDW
Approved By:	AEB

TTCI

HOUSE 201

POWER DISTRIBUTION CIRCUITS RACK 2

Scale:	NTS
CADD File Name:	201007a.DWG
Submitted Date:	03/19/15
Sheet No.	007a

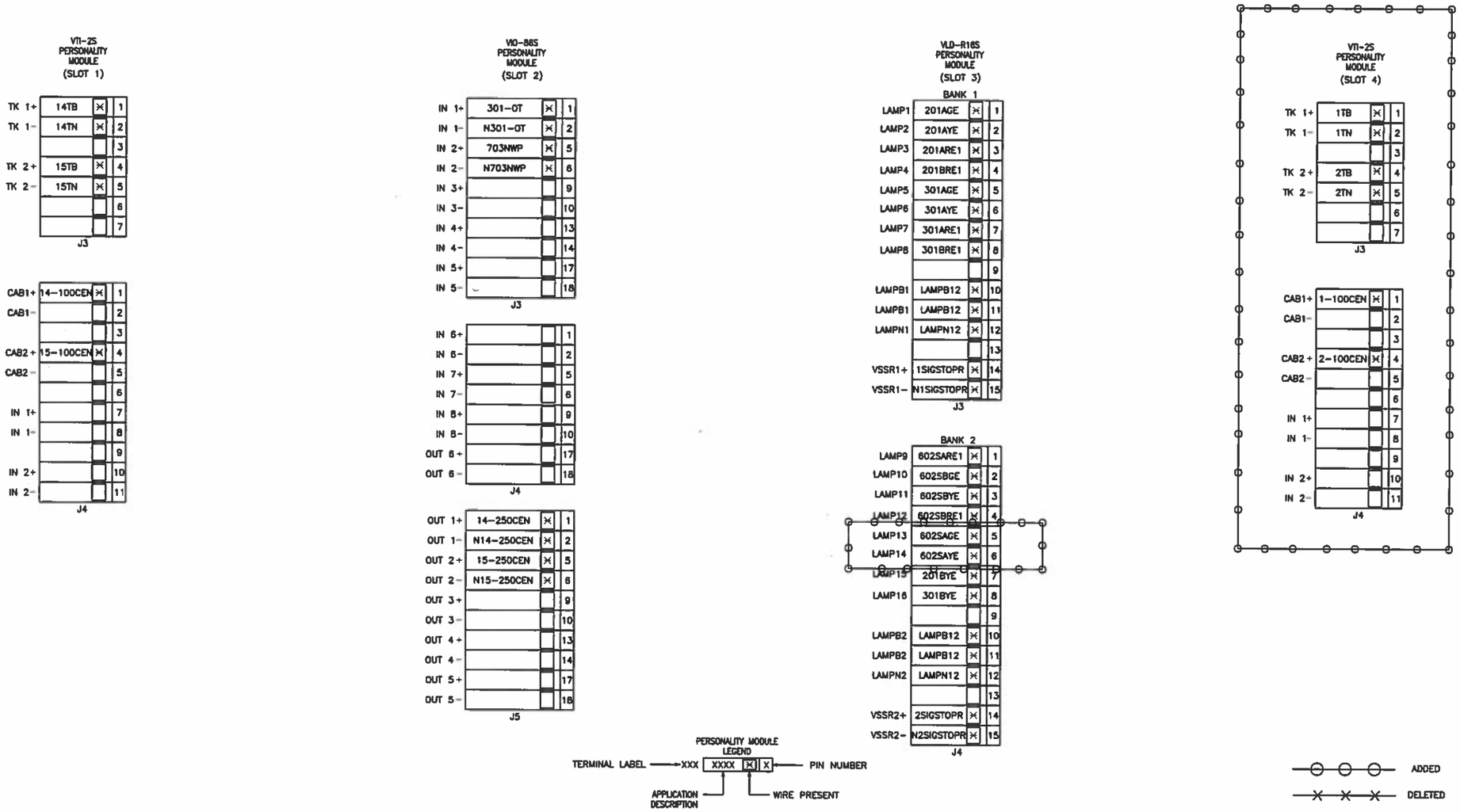

REV	DATE	DESCRIPTION
3	03/30/15	DELETED 703-OT CONNECTIONS TO VIO-86S INPUT 3.
2	03/19/15	ADDED TTT VTI-2S & TTT AFTACII TRACK VIO-86S INPUT.
1	11/26/14	AS-IN SERVICE

GETS
Global Signaling

Designed By: BDV
Drawn By: SAT
Checked By: RWL
Approved By: AEB

TTCI

HOUSE 201

ELECTROLOGIXS 4-SLOT
MODULE CONNECTOR USAGE

Scale: NTS
CADD File Name: 201008.DWG
Submitted Date: 04/03/13
Sheet No. 008

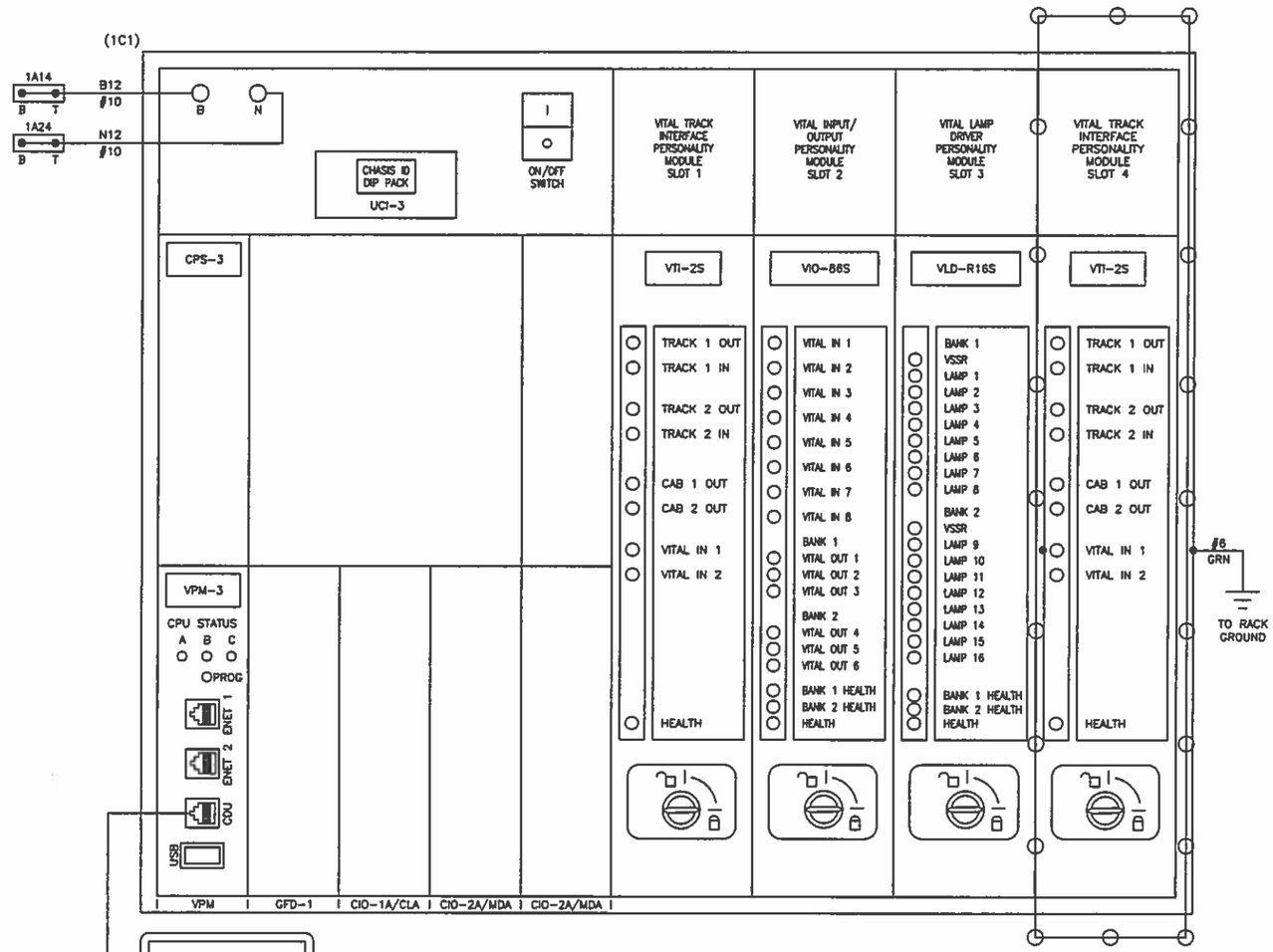

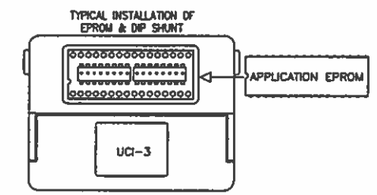

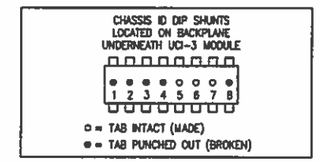

VITAL SELECTION ID-N/A

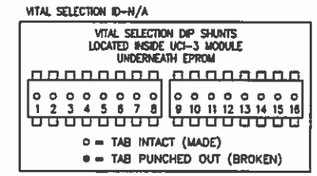

APPLICATION SOFTWARE INFORMATION	
NAME	house201v
REV.	1.0
CHECKSUM	8352
CRC	4E02

ADDED

DELETED

NOTES:

CDU-1 = CONTROL DISPLAY UNIT
CPS-3 = CENTRAL POWER SUPPLY
VPM-3 = VITAL PERIPHERAL MASTER MODULE
UCI-3 = CHASSIS INFORMATION MODULE
VTI-2S = VITAL TRACK INTERFACE
VLD-C6S = VITAL LAMP DRIVER MODULE
VIO-86S = VITAL INPUTS/OUTPUTS
CIO-1A = COMMUNICATION INPUT/OUTPUT
CIO-MDA = COMMUNICATION INPUT/OUTPUT

REV	DATE	DESCRIPTION
2	03/19/15	ADDED VTI-2S FOR TTT TRACK
1	11/26/14	AS-IN SERVICE

GETS
Global Signaling

Designed By: BDV
Drawn By: SAT
Checked By: RWL
Approved By: AEB

TTCI

HOUSE 201

ELECTROLOGIXS 4-SLOT
HARDWARE CONFIGURATION

Scale: NTS
CADD File Name: 201009.DWG
Submitted Date: 04/03/13
Sheet No. 009

SYSTEM CONFIGURATION				
DATE/TIME	SETTING MADE WHEN USING PTC CONFIGURATION			
DIAGNOSTIC PORT				
ETHERNET CONFIG.				
OFFICE CONFIG	NA			
LCP CONFIG	ENABLED	FALSE		
VITAL REMOTE CONFIG	LOCAL PORT	REMOTE PORT	REMOTE PORT CONFIG	
	ETHERNET PORT 1 192.168.40.14	1	IP	192.168.40.18
			PORT	8284
			LOCAL NETWORK ID	513
			REMOTE NETWORK ID	18
			PROTOCOL	RP2000
			DATE/TIME UPDATE	ENABLED
			MAC	DISABLED
			KEY IN USE	NO
		2	IP	192.168.40.71
			PORT	8290
			LOCAL NETWORK ID	18
			REMOTE NETWORK ID	71
			PROTOCOL	RP2000
			DATE/TIME UPDATE	ENABLED
			MAC	DISABLED
			KEY IN USE	NO
		3	IP	192.168.40.76
			PORT	8291
			LOCAL NETWORK ID	19
			REMOTE NETWORK ID	76
			PROTOCOL	RP2000
			DATE/TIME UPDATE	ENABLED
			MAC	DISABLED
			KEY IN USE	NO
	ETHERNET PORT 2 TBD	NA	NA	NA
	SERIAL PORT 2		NA	
	SERIAL PORT 3		NA	

TRACK CONFIG	SLOT	TRACK	CONFIGURATION	
	SLOT 1: 14T_TI1	1	TRANSMITTER	4V
			RECEIVER	0.5A
			CODE 5 TYPE	ALT 5
	SLOT 1: 15T_TI1	2	TRANSMITTER	4V
			RECEIVER	0.5A
			CODE 5 TYPE	ALT 5
	SLOT 4: 1T_TI1	1	TRANSMITTER	4V
			RECEIVER	0.5A
			CODE 5 TYPE	ALT 5
	SLOT 4: 2T_TI1	2	TRANSMITTER	4V
			RECEIVER	0.5A
			CODE 5 TYPE	ALT 5

ADDED

DELETED

NOTES:
1. FINAL VITAL CONFIGURATION SETTINGS ARE SUBJECT TO CHANGE IN ACCORDANCE WITH SOFTWARE UPGRADES. FINAL VITAL CONFIGURATION SETTINGS TO BE UPDATED ON AS-IN-SERVICE.
2. XX = TO BE FILLED OUT DURING FIELD/FACTORY TESTING.

* = FIELD AJUSTMENT

REV	DATE	DESCRIPTION
2	03/19/15	ADDED REMOTE NETWORK AND TRACK CONFIG FOR TTT.
1	11/26/14	AS-IN SERVICE

GETS
Global Signaling

Designed By: BDV
Drawn By: SAT
Checked By: RWL
Approved By: AEB

TTCI

HOUSE 201

ELECTROLOGIXS 4-SLOT CONFIGURATION SETTINGS

Scale: NTS
CADD File Name: 201010.DWG
Submitted Date: 04/03/13
Sheet No. 010

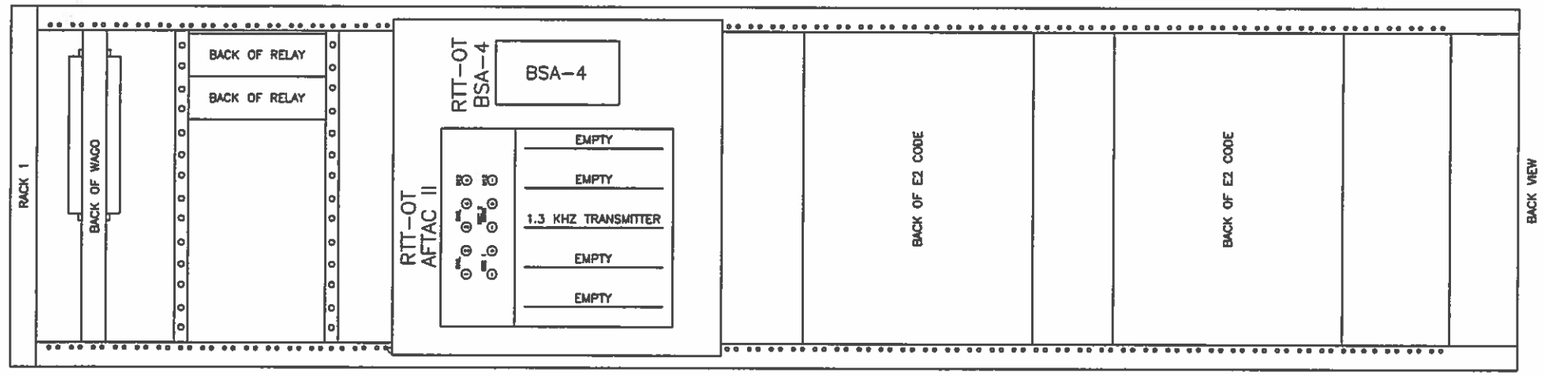

8

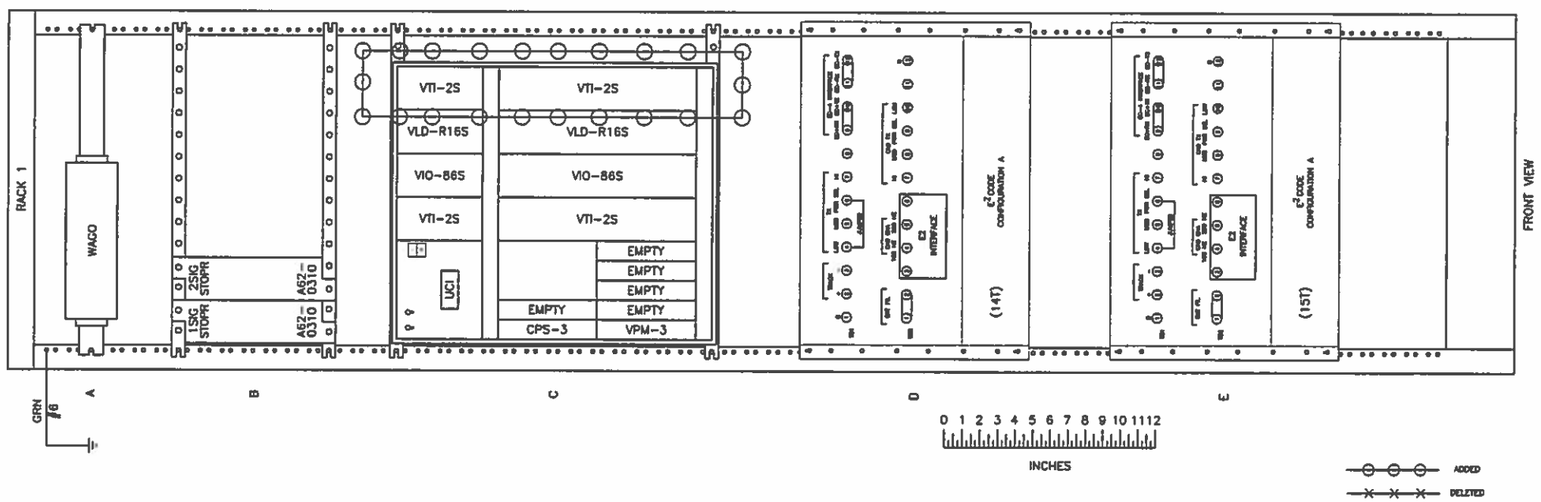

REV	DATE	DESCRIPTION
2	3/19/15	ADDED VTI-2S FOR TTT PROJECT
1	11/26/14	AS-IN SERVICE

GETS
Global Signaling

Designed By:	BDV
Drawn By:	SAT
Checked By:	RWL
Approved By:	AEB

TTCI

HOUSE 201

RACK 1 LAYOUT

Scale:	NTS
CADD File Name:	201011.DWG
Submitted Date:	04/03/13
Sheet No.	011

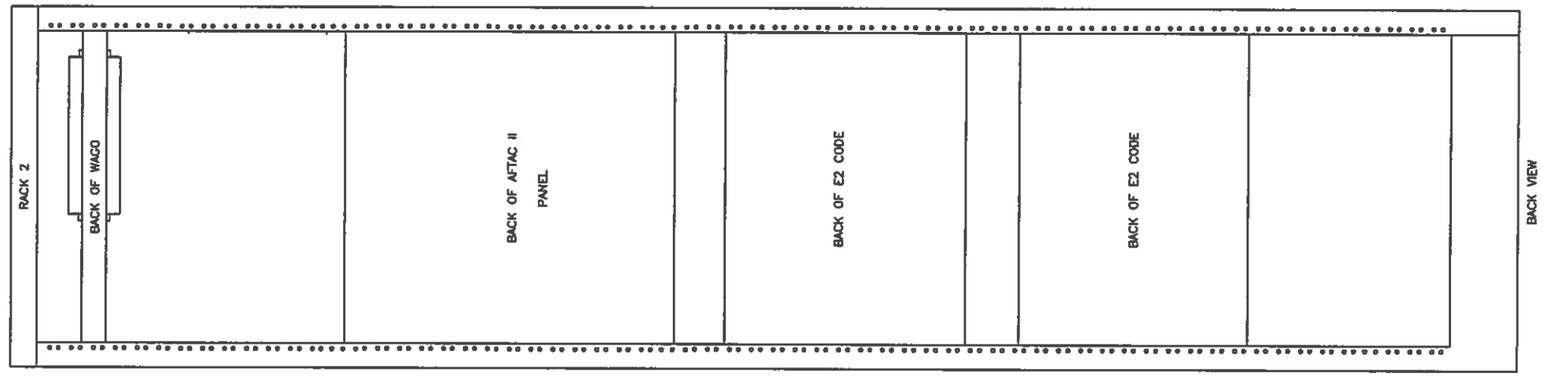

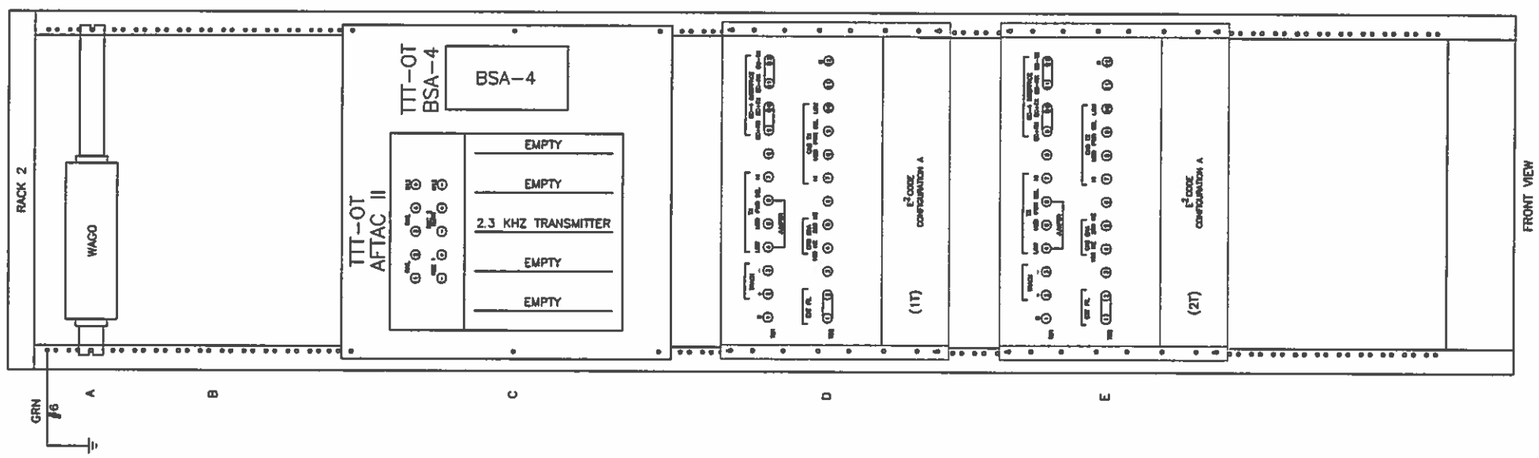

NEW SHEET

0 1 2 3 4 5 6 7 8 9 10 11 12
INCHES

REV	DATE	DESCRIPTION
2	03/19/15	AS-DESIGNED FOR TTT PROJECT
1	11/26/14	AS-IN SERVICE

GETS
Global Signaling

Designed By:	BPC
Drawn By:	BPC
Checked By:	BDW
Approved By:	AEB

TTCI

HOUSE 201

RACK 2 LAYOUT

Scale:	NTS
CADD File Name:	201011a.DWG
Submitted Date:	03/1915
Sheet No.	011a

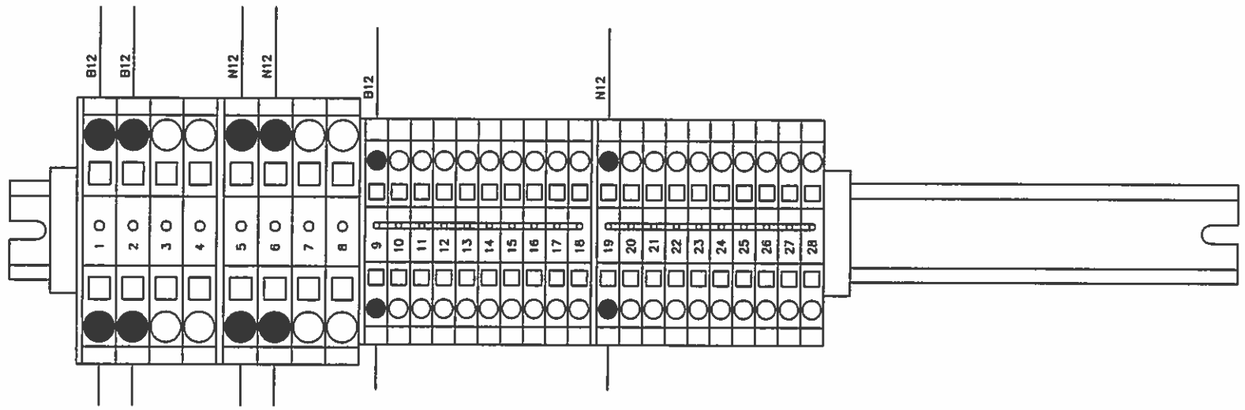

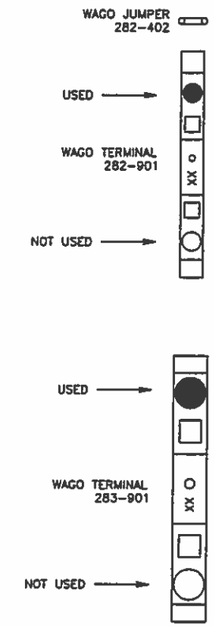

NEW SHEET

REV	DATE	DESCRIPTION
1	03/19/15	AS-DESIGNED FOR TTT PROJECT

GETS
Global Signaling

Designed By:	BPC
Drawn By:	BPC
Checked By:	BDW
Approved By:	AEB

TTCI

HOUSE 201

WAGO & RELAY LAYOUT
RACK 2, ROW A

Scale:	NTS
CADD File Name:	201012a.DWG
Submitted Date:	03/19/15
Sheet No.	012a

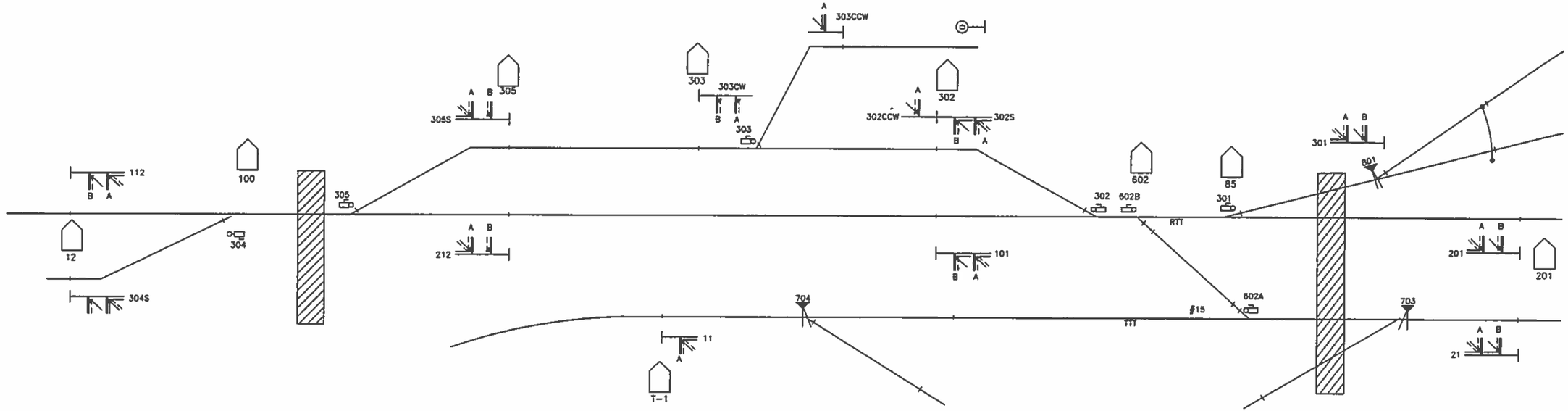

HOUSE 12

RACK 1 IP ADDRESS: 192.168.40.11	
REMOTE 1	
RP2000 PORT	8280
NETWORK ID	10
REMOTE 2	
RP2000 PORT	8281
NETWORK ID	11
REMOTE 3	
RP2000 PORT	8282
NETWORK ID	12
REMOTE 4	
RP2000 PORT	8288
NETWORK ID	13
REMOTE 5	
RP2000 PORT	8285
NETWORK ID	14

TO HOUSE < 248

POST 100

RACK 1 IP ADDRESS: 192.168.40.13	
REMOTE 1	
RP2000 PORT	8280
NETWORK ID	4

HOUSE 305

RACK 1 IP ADDRESS: 192.168.40.15	
REMOTE 1	
RP2000 PORT	8281
NETWORK ID	5

HOUSE 302

RACK 1 IP ADDRESS: 192.168.40.18	
REMOTE 1	
RP2000 PORT	8283
NETWORK ID	770
REMOTE 2	
RP2000 PORT	8282
NETWORK ID	119
REMOTE 3	
RP2000 PORT	8287
NETWORK ID	15

HOUSE 303

RACK 1 IP ADDRESS: 192.168.40.12	
REMOTE 1	
RP2000 PORT	8285
NETWORK ID	6
REMOTE 2	
RP2000 PORT	8286
NETWORK ID	7

RACK 2 IP ADDRESS: 192.168.40.17	
REMOTE 1	
RP2000 PORT	8286
NETWORK ID	8
REMOTE 2	
RP2000 PORT	8287
NETWORK ID	9

HOUSE 602

RACK 1 RS400 IP ADDRESS: 192.168.40.16	
RP2000 PORT	8283
NETWORK ID	16
RAW SOCKET	COM 2
VHLC RS232 PORT	B
RP2000 PORT	8284
NETWORK ID	15
RAW SOCKET	COM 4
VHLC RS232 PORT	D

HOUSE T-1

RACK 1 IP ADDRESS: 192.168.40.71	
REMOTE 1	
RP2000 PORT	8290
NETWORK ID	71

HOUSE 201

RACK 1 IP ADDRESS: 192.168.40.14	
REMOTE 1	
RP2000 PORT	8284
NETWORK ID	513
REMOTE 2	
RP2000 PORT	8290
NETWORK ID	18
REMOTE 3	
RP2000 PORT	8291
NETWORK ID	19

HOUSE T-6

RACK 1 IP ADDRESS: 192.168.40.76	
REMOTE 1	
RP2000 PORT	8291
NETWORK ID	76

ADDED

DELETED

REV	DATE	DESCRIPTION
2	03/17/15	ADDED HOUSES T-1 AND T-6
1	11/26/14	AS-IN SERVICE

GETS Global Signaling

Designed By: BPC
Drawn By: SAT
Checked By: BDV
Approved By: AEB

TTCI

HOUSE 201

VITAL REMOTE NETWORKS

Scale: NTS
CADD File Name: 201013.DWG
Submitted Date: 06/03/14
Sheet No. 013

HOUSE 85

REV	DATE	DESCRIPTION
3	03/30/15	UPDATES AFTER TTCI SITE SURVEY/DESIGN REVIEW
2	03/19/15	UPDATED FOR TTT PROJECT
1	11/26/14	AS-IN SERVICE

GETS
Global Signaling

Designed By:	BDV
Drawn By:	SAT
Checked By:	RWL
Approved By:	AEB

TTCI

HOUSE 85

COVER SHEET

Scale:	NTS
CADD File Name:	85000.DWG
Submitted Date:	04/03/13
Sheet No.	000

INDEX OF DRAWINGS			
SHT. NO.	DWG. NO.	REV.	DESCRIPTION
000	85000.DWG	3	COVER SHEET
001	85001.DWG	3	INDEX
002	85002.DWG	3	TRACK & SIGNAL PLAN
003	85003.DWG	3	TRACK CIRCUITS
004	85004.DWG	3	WALL LAYOUT

REV	DATE	DESCRIPTION
3	03/30/15	UPDATES AFTER TTCI SITE SURVEY/DESIGN REVIEW
2	03/19/15	UPDATED FOR TTT PROJECT
1	11/26/14	AS-IN SERVICE

GETS
Global Signaling

Designed By: BDV
Drawn By: SAT
Checked By: RWL
Approved By: AEB

TTCI

HOUSE 85

INDEX

Scale: NTS
CADD File Name: 85001.DWG
Submitted Date: 04/03/13
Sheet No. 001

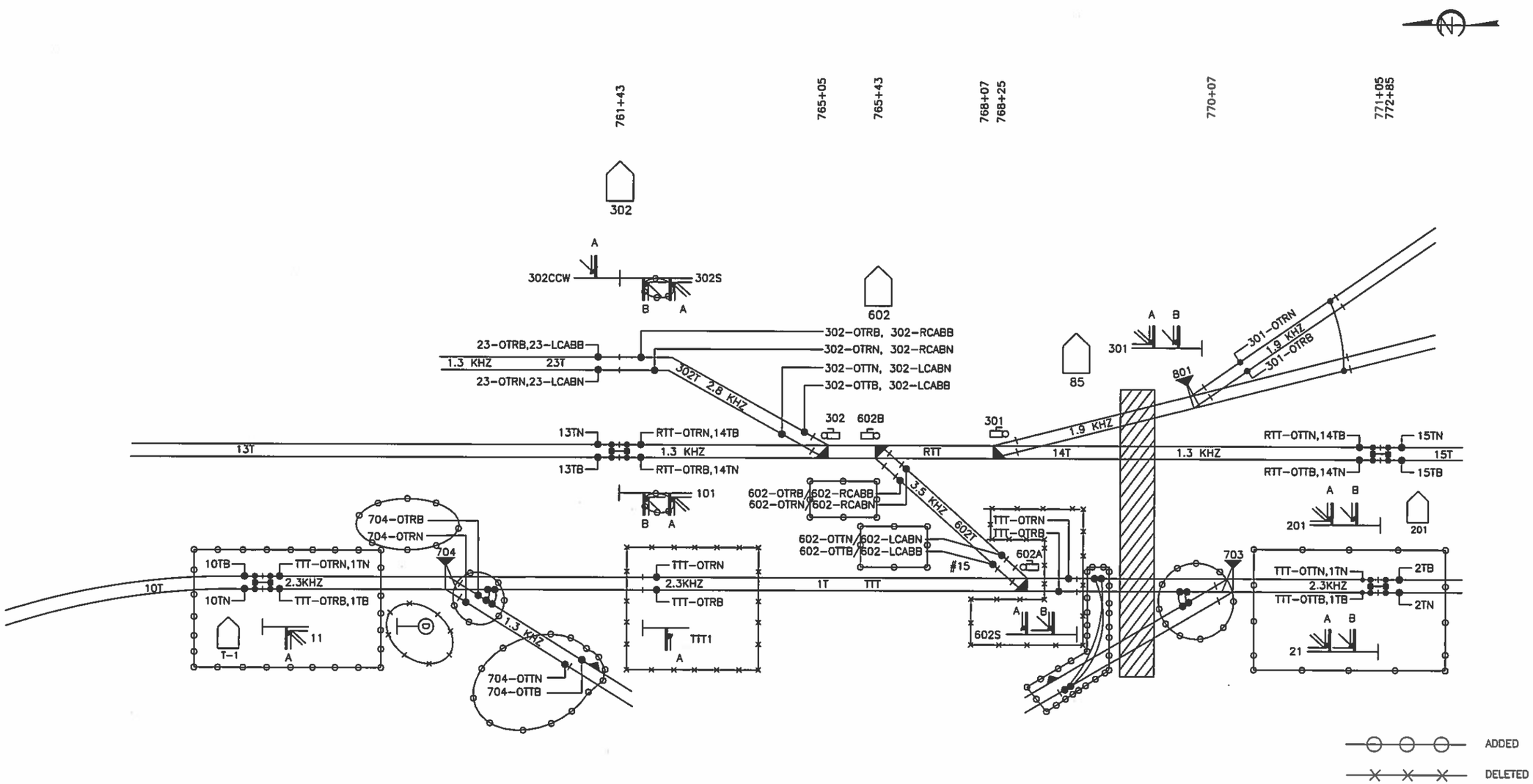

REV	DATE	DESCRIPTION
3	03/30/15	CHANGED 703 & 704 CIRCUITS
2	03/17/15	UPDATED FOR TTT SIGNALING PROJECT
1	11/26/14	AS-IN SERVICE

GETS
Global Signaling

Designed By: BDV
Drawn By: SAT
Checked By: RWL
Approved By: AEB

TTCI

HOUSE 85

TRACK & SIGNAL PLAN

Scale: NTS
CADD File Name: 85002.DWG
Submitted Date: 04/03/13
Sheet No. 002

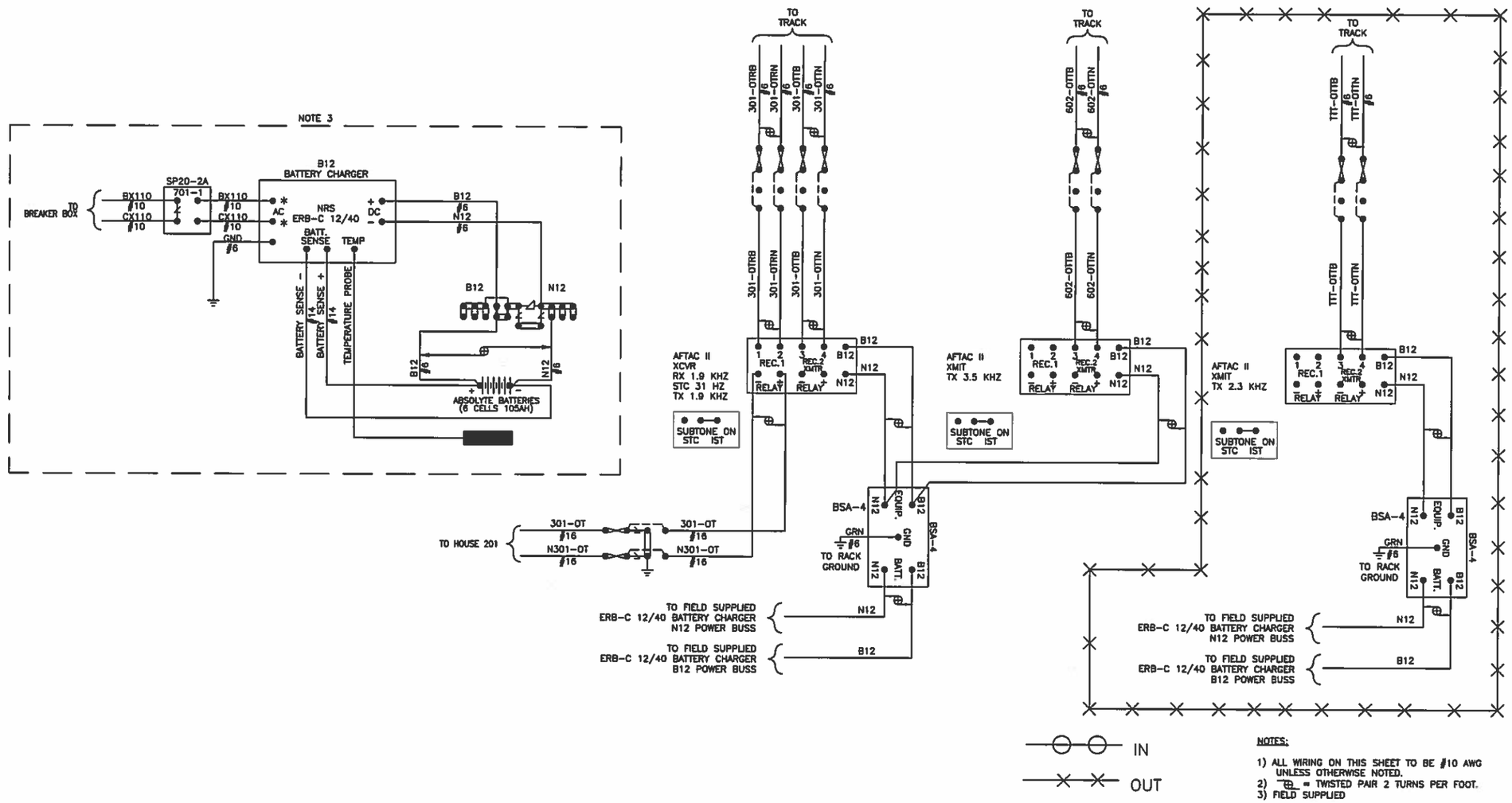

NOTES:

1) ALL WIRING ON THIS SHEET TO BE #10 AWG UNLESS OTHERWISE NOTED.
2) ⊕ = TWISTED PAIR 2 TURNS PER FOOT.
3) FIELD SUPPLIED

REV	DATE	DESCRIPTION
3	03/30/15	REMOVED AFTAC; WILL USE SHUNT FOULING AT THE 703 TURNOUT
2	03/19/15	REMOVED AFTAC II TTT XMTR, ADDED AFTAC II 703 XCVR
1	11/26/14	AS-IN SERVICE

GETS
Global Signaling

Designed By:	BDV
Drawn By:	SAT
Checked By:	RWL
Approved By:	AEB

TTCI

HOUSE 85

TRACK CIRCUITS

Scale:	NTS
CADD File Name:	85003.DWG
Submitted Date:	04/03/13
Sheet No.	003

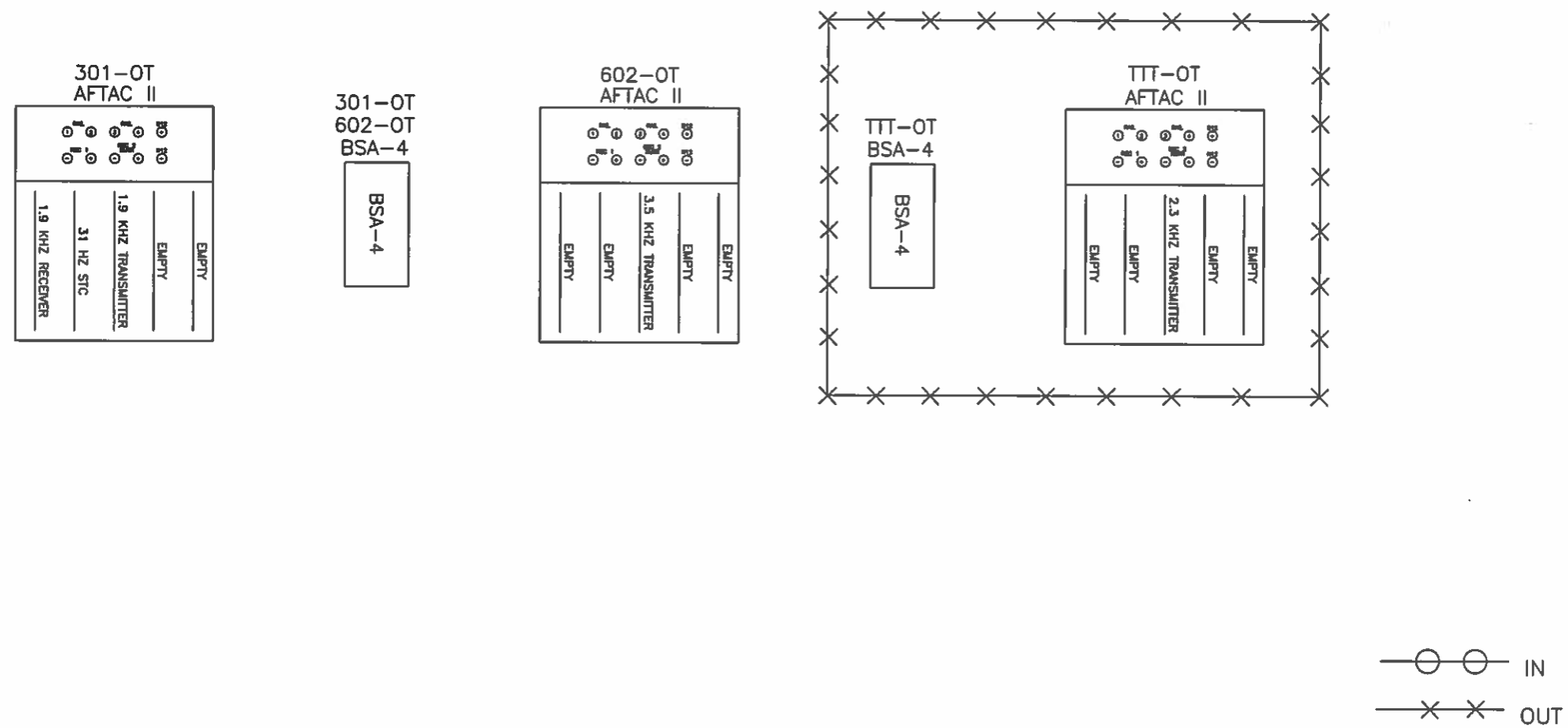

REV	DATE	DESCRIPTION
3	03/30/15	REMOVED AFTAC; WILL USE SHUNT FOULING AT THE 703 TURNOUT
2	03/19/15	REMOVED AFTAC II TTT XMTR, ADDED AFTAC II 703 XCVR
1	11/26/14	AS-IN SERVICE

GETS
Global Signaling

Designed By: BDV
Drawn By: SAT
Checked By: RWL
Approved By: AEB

TTCI

HOUSE 85

WALL LAYOUT

Scale: NTS
CADD File Name: 85004.DWG
Submitted Date: 04/03/13
Sheet No. 004

HOUSE 302

REV	DATE	DESCRIPTION
3	03/30/15	UPDATES AFTER TTCI SITE SURVEY/DESIGN REVIEW
2	03/17/15	UPDATED FOR TTT SIGNALING PROJECT
1	11/26/14	AS-IN SERVICE

GETS
Global Signaling

Designed By:	BDV
Drawn By:	SAT
Checked By:	RWL
Approved By:	AEB

TTCI

HOUSE 302

COVER SHEET

Scale:	NTS
CADD File Name:	302000.DWG
Submitted Date:	04/03/13
Sheet No.	000

INDEX OF DRAWINGS

SHT. NO.	DWG. NO.	REV.	DESCRIPTION
000	302000.DWG	3	COVER SHEET
001	302001.DWG	3	INDEX
002	302002.DWG	3	TRACK & SIGNAL PLAN
003	302003.DWG	2	CODE & ASPECT CHART
004	302004.DWG	2	TRACK CIRCUITS
005	302005.DWG	2	SIGNAL LIGHTING CIRCUITS (RACK 1)
005a	302005a.DWG	1	SIGNAL LIGHTING CIRCUITS (RACK 2)
006	302006.DWG	1	PTC & COMMUNICATIONS
007	302007.DWG	1	POWER DISTRIBUTION CIRCUITS (RACK 1)
007a	302007a.DWG	1	POWER DISTRIBUTION CIRCUITS
008	302008.DWG	2	ELECTROLOGIXS 4-SLOT MODULE CONNECTOR USAGE (RACK 1)
008a	302008a.DWG	1	ELECTROLOGIXS 4-SLOT MODULE CONNECTOR USAGE (RACK 2)
009	302009.DWG	1	ELECTROLOGIXS 4-SLOT HARDWARE CONFIGURATION (RACK 1)
009a	302009a.DWG	1	ELECTROLOGIXS 4-SLOT HARDWARE CONFIGURATION (RACK 2)
010	302010.DWG	1	ELECTROLOGIXS 4-SLOT CONFIGURATION SETTINGS (RACK 1)
010a	302010a.DWG	1	ELECTROLOGIXS 4-SLOT CONFIGURATION SETTINGS (RACK 2)
011	302011.DWG	2	RACK 1 LAYOUT
011a	302011a.DWG	1	RACK 2 LAYOUT
012	302012.DWG	1	WAGO & RELAY LAYOUT RACK 1, ROW A & B
012a	302012a.DWG	1	WAGO & RELAY LAYOUT RACK 2, ROW A & B
013	302013.DWG	2	VITAL REMOTE NETWORKS

REV	DATE	DESCRIPTION
3	03/30/15	UPDATES AFTER TTCI SITE SURVEY/DESIGN REVIEW
2	03/17/15	UPDATED FOR TTT SIGNALING PROJECT
1	11/26/14	AS-IN SERVICE

GETS
Global Signaling

Designed By: BDV
Drawn By: SAT
Checked By: RWL
Approved By: AEB

TTCI

HOUSE 302

INDEX

Scale: NTS
CADD File Name: 302001.DWG
Submitted Date: 04/04/14
Sheet No. 001

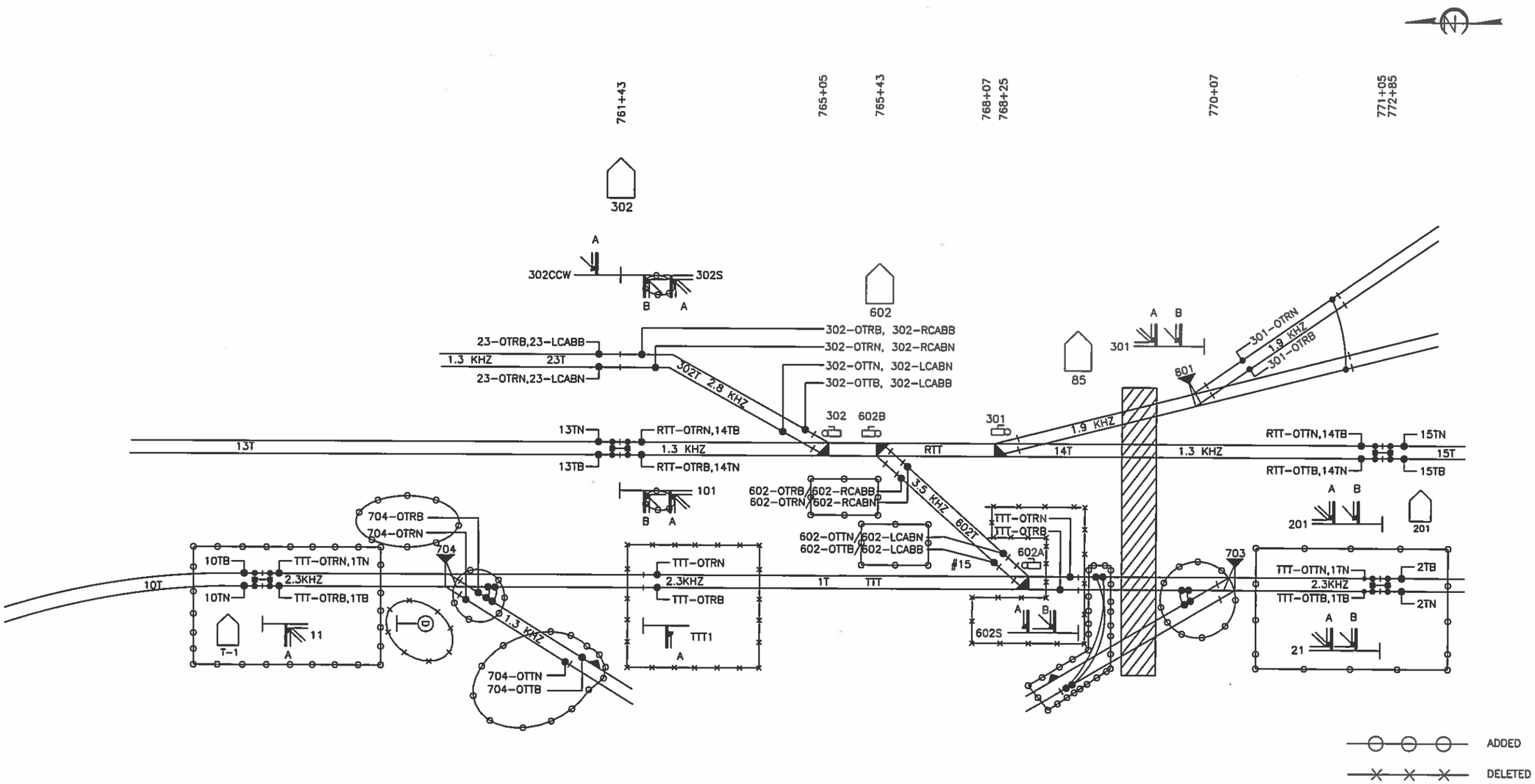

REV	DATE	DESCRIPTION
3	03/30/15	CHANGED 703 & 704 CIRCUITS
2	03/17/15	UPDATED FOR TTT SIGNALING PROJECT
1	11/26/14	AS-IN SERVICE

GETS
Global Signaling

Designed By: BDV
Drawn By: SAT
Checked By: RWL
Approved By: AEB

TTCI

HOUSE 302

TRACK & SIGNAL PLAN

Scale: NTS
CADD File Name: 302002.DWG
Submitted Date: 04/10/14
Sheet No. 002

LAMP OUT DOWNGRADES FOR 302CCW					
CODE IN	LAMP OUT	ASPECT	PTC	CODE OUT	CAB RATE
8	Y	FR	13	8	120/–
2	R	D	30	9	75/–
*NO CODE	R	D	30	9	75/–

* OR SIGNAL AT STOP

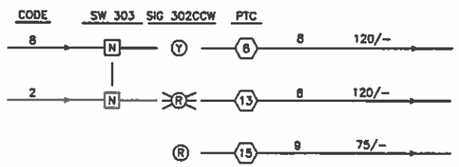

LAMP OUT DOWNGRADES FOR 101					
CODE IN	LAMP OUT	ASPECT	PTC	CODE OUT	CAB OUT
7,9	TOP G	FY/R	6	7	180/–
3,4,7,8,9	TOP G & Y	FR/R	13	8	75/–
3,4,7,8,9	ALL TOP	D/FR	13	8	75/–
7	BOTTOM R	G/D	3	7	180/180
8	BOTTOM R	Y/D	6	3	270/–
3	BOTTOM R	FY/D	6	4	120/120
4	BOTTOM R	FY/D	6	7	180/–
9	BOTTOM R	G/D	3	7	180/180
*NO CODE	TOP R	D/R	15	8	75/–
*NO CODE	BOTTOM R	R/D	15	8	75/–
DIVERGING	TOP R	D/FR	13	8	120/–
DIVERGING,7	BOTTOM G	R/FY	11	8	120/–
DIVERGING,7,4,8	BOTTOM G & Y	R/FR	13	8	120/–
DIVERGING	ALL BOTTOM	FR/D	13	8	120/–
ALL CODES	ALL TOP & BOTTOM	D/D	30	6	75/–

* OR SIGNAL AT STOP

LAMP OUT DOWNGRADES FOR 302S					
CODE IN	LAMP OUT	ASPECT	PTC	CODE OUT	CAB OUT
7,9	TOP G	FY/R	6	8	120/–
3,4,7,8,9	TOP G & Y	FR/R	13	8	120/–
3,4,7,8,9	ALL TOP	D/FR	13	8	120/–
7	BOTTOM R	G/D	3	8	120/–
8	BOTTOM R	Y/D	8	8	120/–
3	BOTTOM R	FY/D	6	8	120/–
4	BOTTOM R	FY/D	6	8	120/–
9	BOTTOM R	G/D	8	8	120/–
*NO CODE	TOP R	D/R	15	2	75/–
*NO CODE	BOTTOM R	R/D	15	8	75/–
DIVERGING	TOP R	D/FR	13	8	120/–
DIVERGING,7	BOTTOM G	R/FY	11	8	120/–
DIVERGING,7,4,8	BOTTOM G & Y	R/FR	13	8	120/–
DIVERGING	ALL BOTTOM	FR/D	13	8	120/–
ALL CODES	ALL TOP & BOTTOM	D/D	30	8	75/–

* OR SIGNAL AT STOP

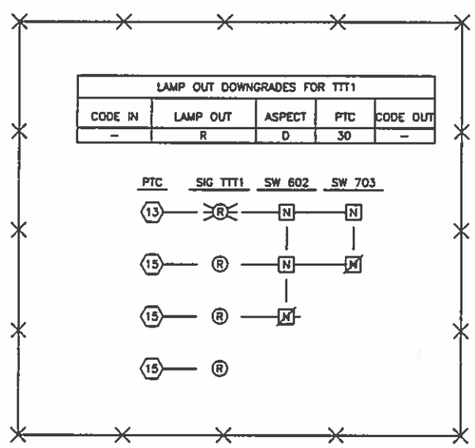

LAMP OUT DOWNGRADES FOR TTT1				
CODE IN	LAMP OUT	ASPECT	PTC	CODE OUT
–	R	D	30	–

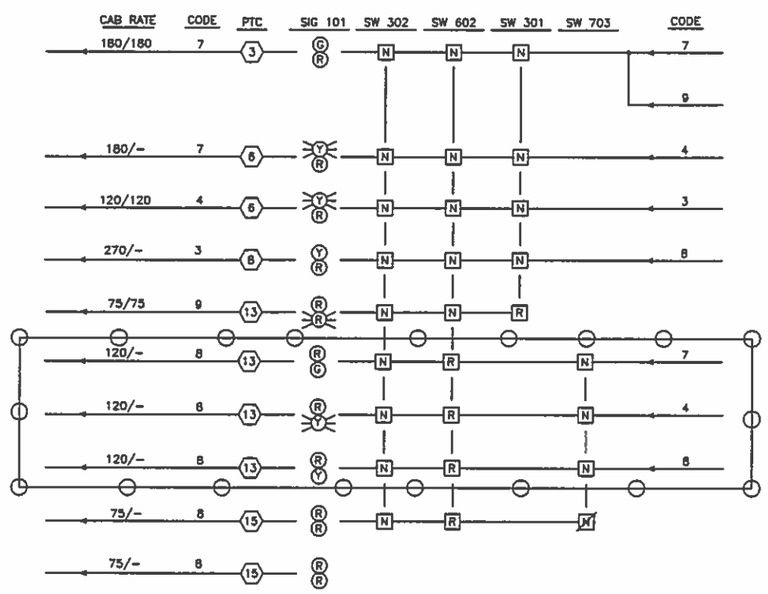

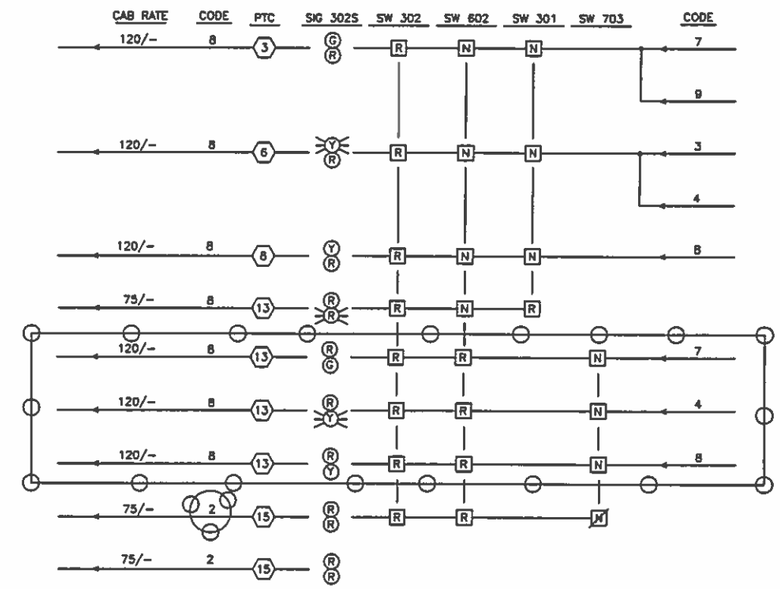

CAB RATE TABLE		
NAME	DESIGNATOR	RATE
Clear (150)	C150	180/180
Clear (125)	C125	180/–
Cab Speed (80)	CS80	120/120
Cab Speed (60)	CS60	270/–
Approach Limited (??)	AL??	120/–
Approach Medium (??)	AM??	75/75
Approach	A	75/–

ADDED

DELETED

NOTES:

N – SWITCH IN NORMAL POSITION

R – SWITCH IN REVERSE POSITION

M – SWITCH NOT NORMAL

REV	DATE	DESCRIPTION
2	03/17/15	REMOVED TTT-1 SIG, ADDED DIVERGING ROUTES 101& 302S SIGS
1	11/26/14	AS-IN SERVICE

GETS
Global Signaling

Designed By: BDV
Drawn By: SAT
Checked By: RWL
Approved By: AEB

TTCI

HOUSE 302

CODE & ASPECT CHART

Scale: NTS
CADD File Name: 302003.DWG
Submitted Date: 04/10/14
Sheet No. 003

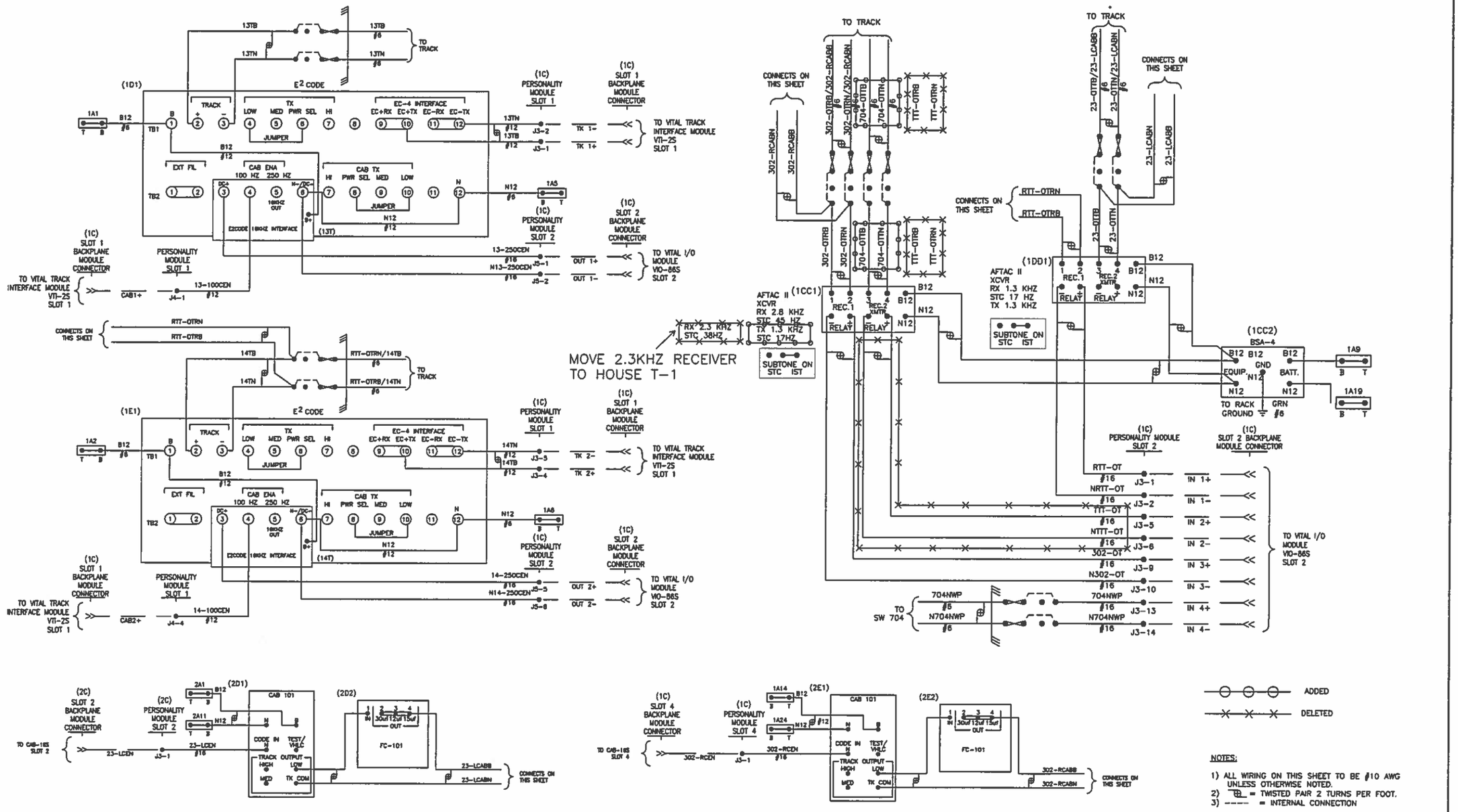

NOTES:

1) ALL WIRING ON THIS SHEET TO BE #10 AWG UNLESS OTHERWISE NOTED.
2) = TWISTED PAIR 2 TURNS PER FOOT.
3) ---- = INTERNAL CONNECTION

REV	DATE	DESCRIPTION
2	3/17/15	CHANGED AFTAC TO DRIVE 704 XMTR FOR TTT SIGNALING PROJECT
1	11/26/14	AS-IN SERVICE

GETS Global Signaling

Designed By: BDV
Drawn By: SAT
Checked By: RWL
Approved By: AEB

TTCI

HOUSE 302

TRACK CIRCUITS

Scale: NTS
CADD File Name: 302004.DWG
Submitted Date: 04/14/14
Sheet No. 004

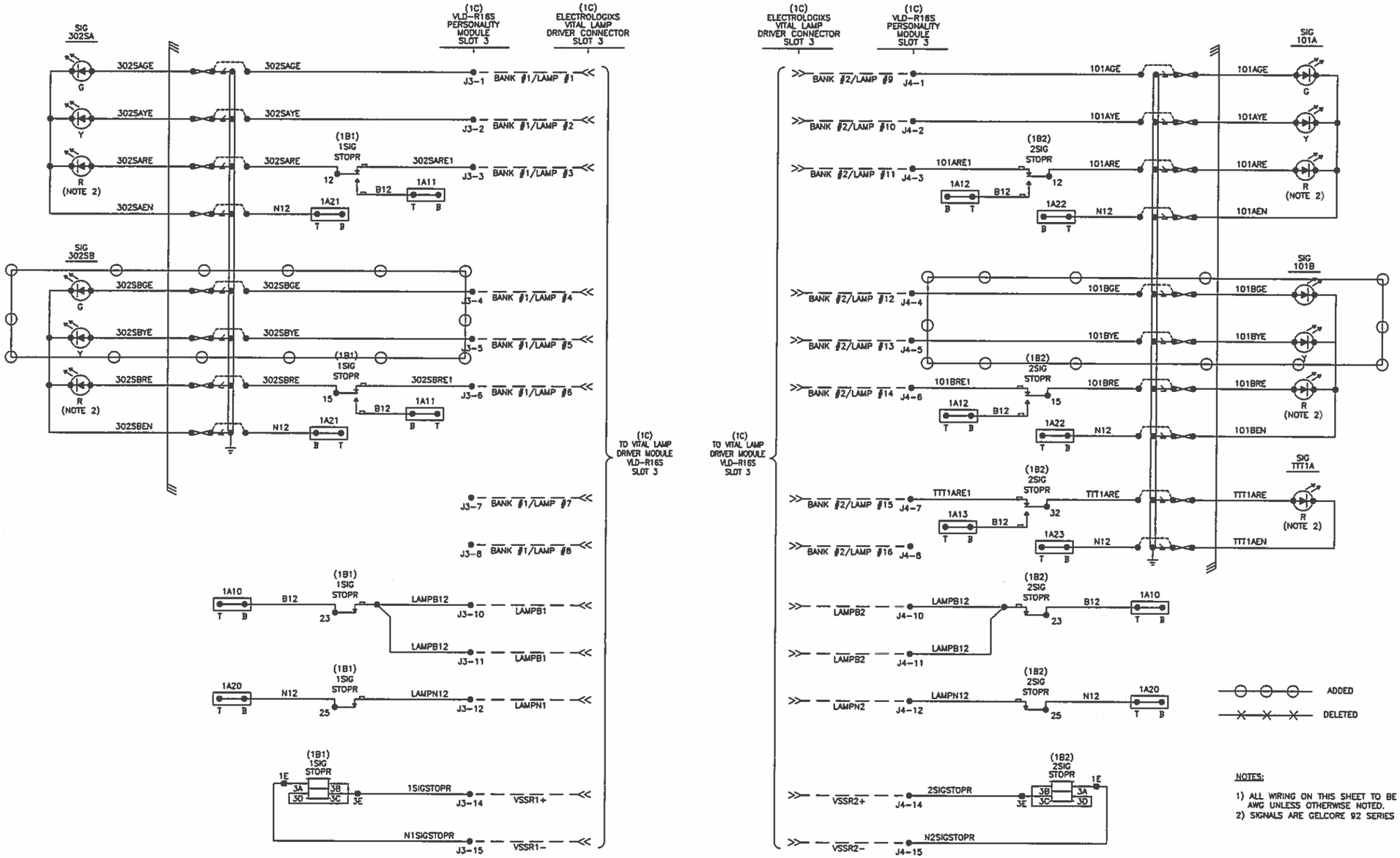

NOTES:

1) ALL WIRING ON THIS SHEET TO BE #12 AWG UNLESS OTHERWISE NOTED.
2) SIGNALS ARE GELCORE 92 SERIES

REV	DATE	DESCRIPTION
2	03/17/15	ADDED 101 BGE,BYE & 202 BGE,BYE SIGS FOR TTT SIG. PROJECT.
1	11/26/14	AS-IN SERVICE

GETS
Global Signaling

Designed By:	BDV
Drawn By:	SAT
Checked By:	RWL
Approved By:	AEB

TTCI

HOUSE 302

SIGNAL LIGHTING CIRCUITS (RACK 1)

Scale:	NTS
CADD File Name:	302005.DWG
Submitted Date:	04/03/13
Sheet No.	005

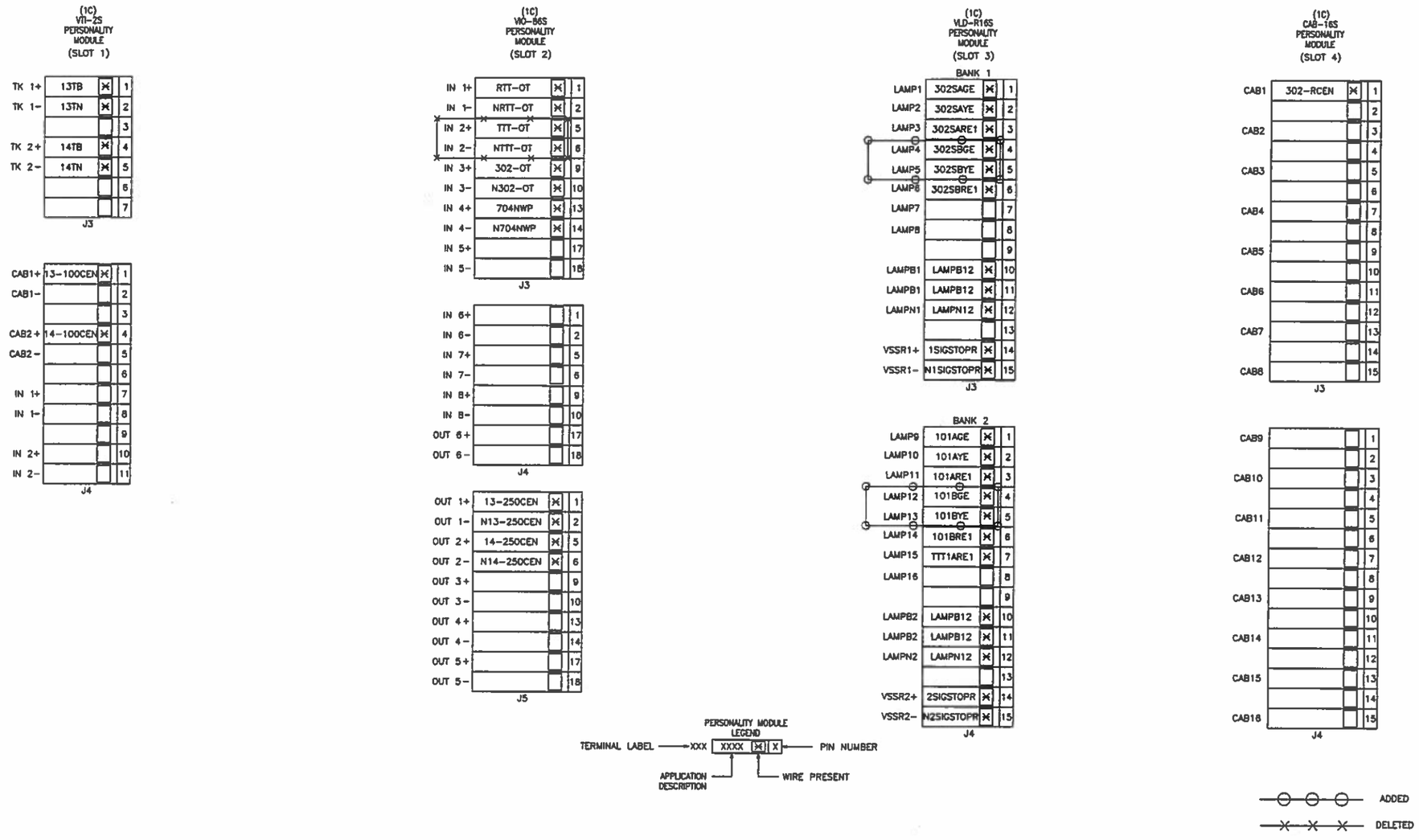

REV	DATE	DESCRIPTION
2	03/17/15	REMOVED TTT-OT, ADDED SIGS 101BGE, 101BYE, 302BGE, 302BYE
1	11/26/14	AS-IN SERVICE

GETS
Global Signaling

Designed By: BDV
Drawn By: SAT
Checked By: RWL
Approved By: AEB

TTCI

HOUSE 302

ELECTROLOGIXS 4-SLOT (RACK 1)
MODULE CONNECTOR USAGE

Scale: NTS
CADD File Name: 302008.DWG
Submitted Date: 04/14/14
Sheet No. 008

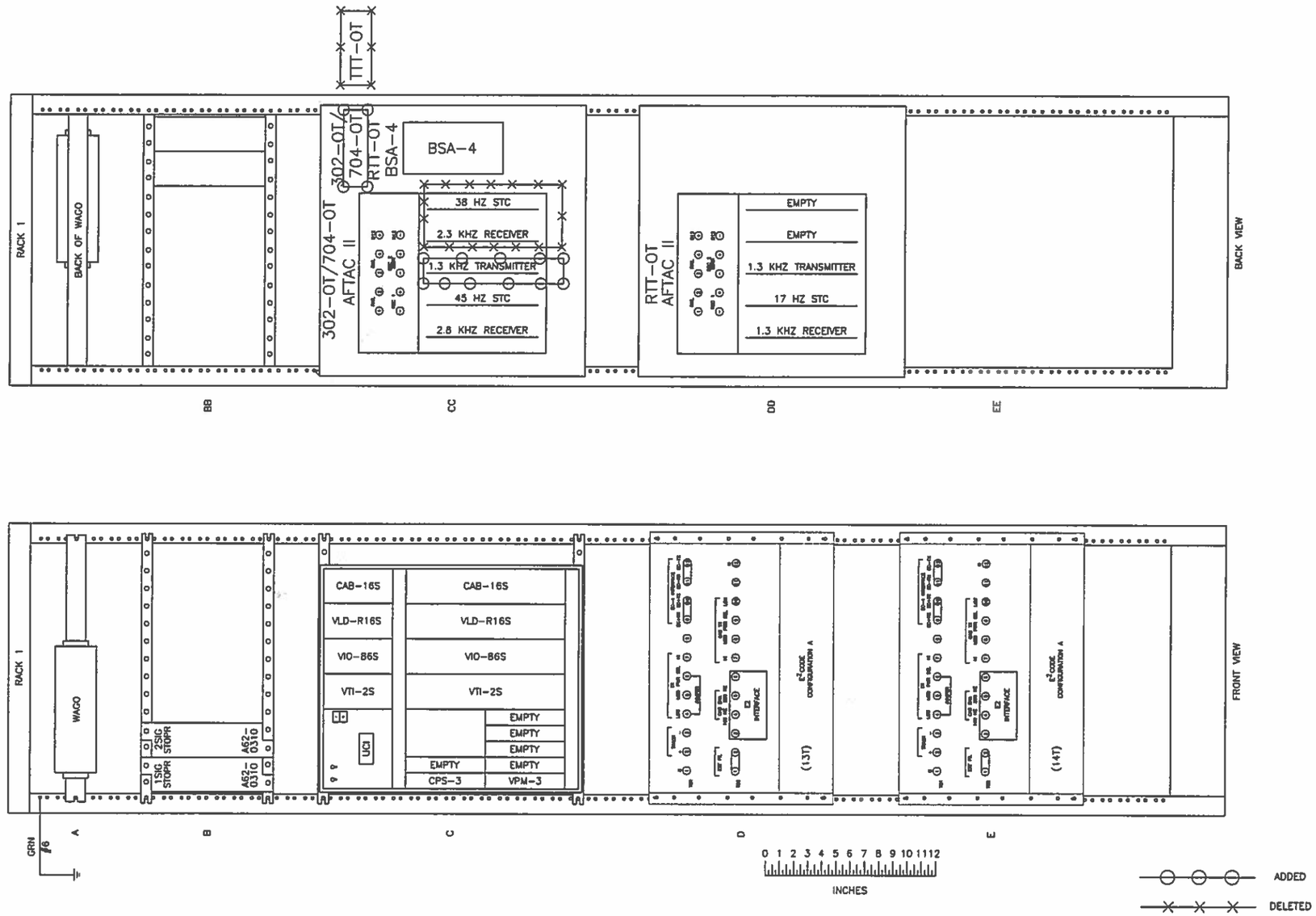

REV	DATE	DESCRIPTION
2	03/17/15	REMOVED AFTACII 2.3KHZ RCVR & 38HZ STC, ADDED 1.3KHZ XMTR
1	11/26/14	AS-IN SERVICE

GETS
Global Signaling

Designed By:	BDV
Drawn By:	SAT
Checked By:	RWL
Approved By:	AEB

TTCI

HOUSE 302

RACK 1 LAYOUT

Scale:	NTS
CADD File Name:	302011.DWG
Submitted Date:	04/03/13
Sheet No.	011

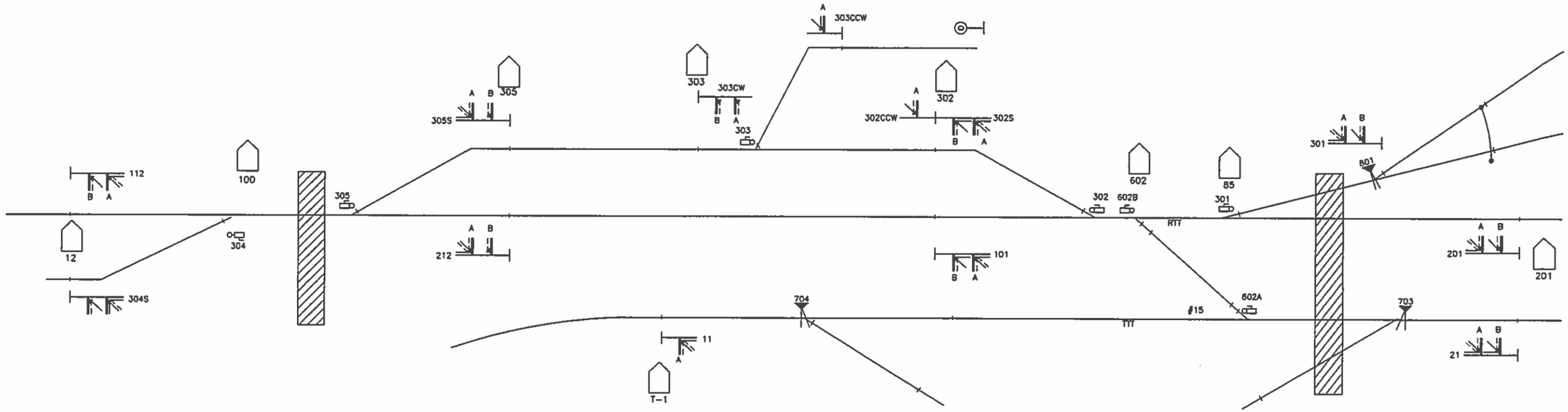

HOUSE 12

RACK 1	
IP ADDRESS: 192.168.40.11	
REMOTE 1	
RP2000 PORT	8280
NETWORK ID	10
REMOTE 2	
RP2000 PORT	8281
NETWORK ID	11
REMOTE 3	
RP2000 PORT	8282
NETWORK ID	12
REMOTE 4	
RP2000 PORT	8288
NETWORK ID	13
REMOTE 5	
RP2000 PORT	8285
NETWORK ID	14

TO HOUSE < 248

POST 100

RACK 1	
IP ADDRESS: 192.168.40.13	
REMOTE 1	
RP2000 PORT	8280
NETWORK ID	4

HOUSE 305

RACK 1	
IP ADDRESS: 192.168.40.15	
REMOTE 1	
RP2000 PORT	8281
NETWORK ID	5

HOUSE 303

RACK 1	
IP ADDRESS: 192.168.40.12	
REMOTE 1	
RP2000 PORT	8285
NETWORK ID	6
REMOTE 2	
RP2000 PORT	8286
NETWORK ID	7

HOUSE 302

RACK 1	
IP ADDRESS: 192.168.40.18	
REMOTE 1	
RP2000 PORT	8283
NETWORK ID	770
REMOTE 2	
RP2000 PORT	8282
NETWORK ID	119
REMOTE 3	
RP2000 PORT	8287
NETWORK ID	15

RACK 2	
IP ADDRESS: 192.168.40.17	
REMOTE 1	
RP2000 PORT	8286
NETWORK ID	8
REMOTE 2	
RP2000 PORT	8287
NETWORK ID	9

HOUSE 602

RACK 1	
RS400 IP ADDRESS: 192.168.40.16	
RP2000 PORT	8283
NETWORK ID	16
RAW SOCKET	COM 2
VHLC RS232 PORT	B
RP2000 PORT	8284
NETWORK ID	16
RAW SOCKET	COM 4
VHLC RS232 PORT	D

HOUSE T-1

RACK 1	
IP ADDRESS: 192.168.40.71	
REMOTE 1	
RP2000 PORT	8290
NETWORK ID	71

HOUSE 201

RACK 1	
IP ADDRESS: 192.168.40.14	
REMOTE 1	
RP2000 PORT	8284
NETWORK ID	513
REMOTE 2	
RP2000 PORT	8290
NETWORK ID	18
REMOTE 3	
RP2000 PORT	8291
NETWORK ID	19

HOUSE T-6

RACK 1	
IP ADDRESS: 192.168.40.76	
REMOTE 1	
RP2000 PORT	8291
NETWORK ID	76

ADDED

DELETED

REV	DATE	DESCRIPTION
2	03/17/15	ADDED HOUSES T-1 AND T-6
1	11/26/14	AS-IN SERVICE

GETS Global Signaling

Designed By: BPC
Drawn By: SAT
Checked By: BDV
Approved By: AEB

TTCI

HOUSE 302

VITAL REMOTE NETWORKS

Scale: NTS
CADD File Name: 302013.DWG
Submitted Date: 06/03/14
Sheet No. 013

HOUSE T-1

REV	DATE	DESCRIPTION
2	03/30/15	UPDATES AFTER TTCI SITE SURVEY/DESIGN REVIEW
1	03/06/15	AS DESIGNED

GETS
Global Signaling

Designed By:	BPC
Drawn By:	BPC
Checked By:	BDW
Approved By:	AEB

TTCI

TTT HOUSE T-1

COVER SHEET

Scale:	NTS
CADD File Name:	T1000.DWG
Submitted Date:	03/06/15
Sheet No.	000

INDEX OF DRAWINGS			
SHT. NO.	DWG. NO.	REV.	DESCRIPTION
000	T1000.DWG	2	COVER SHEET
001	T1001.DWG	2	INDEX
002	T1002.DWG	2	TRACK & SIGNAL PLAN
003	T1003.DWG	1	CODE & ASPECT CHART
004	T1004.DWG	1	TRACK CIRCUITS
005	T1005.DWG	1	SIGNAL LIGHTING CIRCUITS
006	T1006.DWG	1	COMMUNICATIONS
007	T1007.DWG	1	POWER DISTRIBUTION CIRCUITS
008	T1008.DWG	1	ELECTROLOGIXS 4-SLOT MODULE CONNECTOR USAGE
009	T1009.DWG	2	ELECTROLOGIXS 4-SLOT HARDWARE CONFIGURATION
010	T1010.DWG	1	ELECTROLOGIXS 4-SLOT CONFIGURATION SETTINGS
011	T1011.DWG	1	RACK 1 LAYOUT
012	T1012.DWG	1	WAGO & RELAY LAYOUT RACK 1, ROW A & B
013	T1013.DWG	1	RTT/TTT VITAL REMOTE NETWORKS

REV	DATE	DESCRIPTION
2	03/30/15	UPDATES AFTER TTCI SITE SURVEY/DESIGN REVIEW
1	03/06/15	AS DESIGNED

GETS
Global Signaling

Designed By: BPC
Drawn By: BPC
Checked By: BDW
Approved By: AEB

TTCI

TTT HOUSE T-1

INDEX

Scale: NTS
CADD File Name: T1001.DWG
Submitted Date: 03/06/15
Sheet No. 001

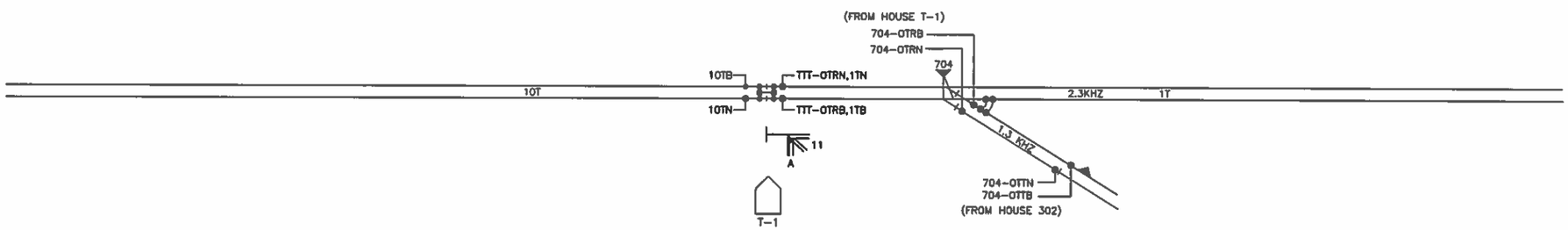

REV	DATE	DESCRIPTION
2	03/30/15	ADDED JUMPERS TO TRACK CIRCUIT 704
1	03/06/15	AS DESIGNED

GETS
Global Signaling

Designed By:	BPC
Drawn By:	BPC
Checked By:	BDW
Approved By:	AEB

TTCI

TTT HOUSE T-1

TRACK & SIGNAL PLAN

Scale:	NTS
CADD File Name:	T1002.DWG
Submitted Date:	03/06/15
Sheet No.	002

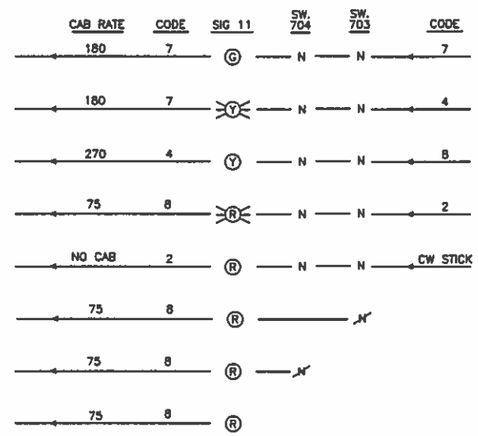

LAMP OUT DOWNGRADES FOR SIG 11				
CODE IN	LAMP OUT	ASPECT	CODE OUT	CAB RATE
7	G	FY	7	180
4,8	Y	FR	8	75
*NO CODE	R	D	8	75
ALL CODES	ALL	D	8	75

TTT CAB RATE TABLE		
NAME	DESIGNATOR	RATE
CLEAR	C	180
CAB SPEED	CS	270
APPROACH LIMITED	AL?	120
APPROACH	A	75
RESTRICTING	R	NO CAB

REV	DATE	DESCRIPTION
1	03/06/15	AS DESIGNED

GETS
Global Signaling

Designed By: BPC
Drawn By: BPC
Checked By: BDW
Approved By: AEB

TTCI

TTT HOUSE T-1

CODE & ASPECT CHART

Scale: NTS
CADD File Name: T1003.DWG
Submitted Date: 03/06/15
Sheet No. 003

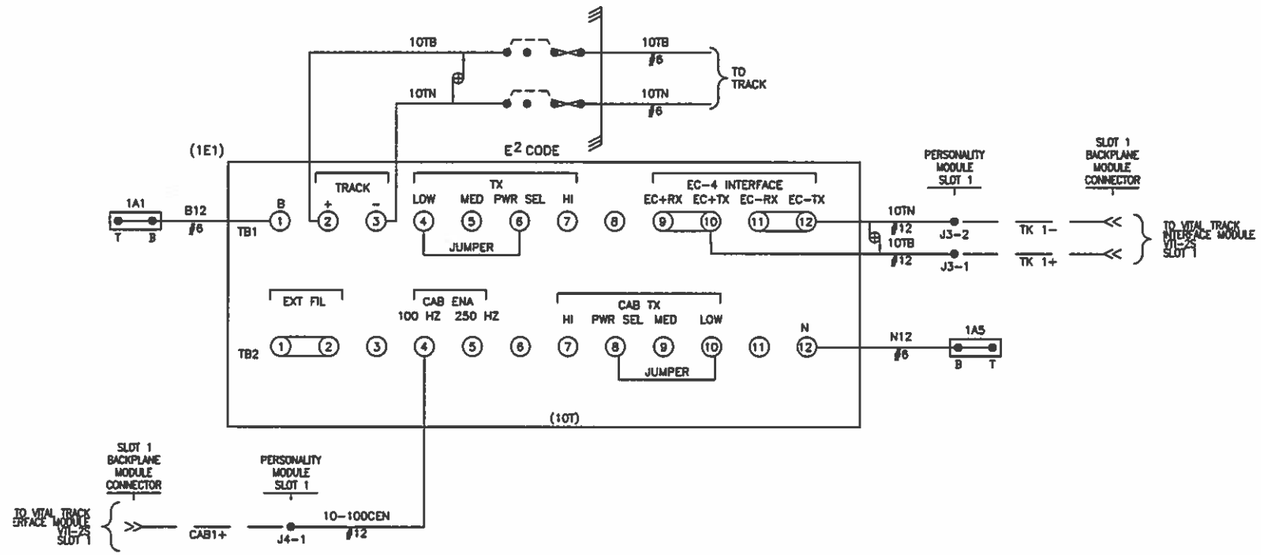

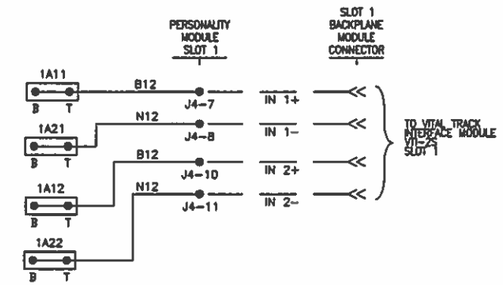

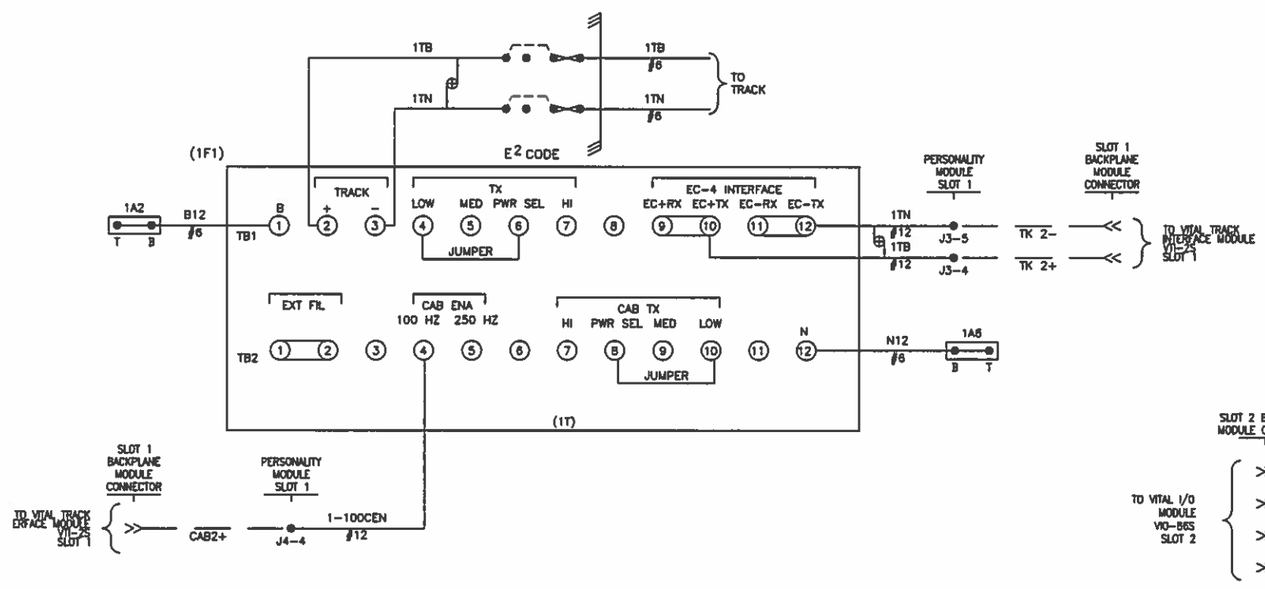

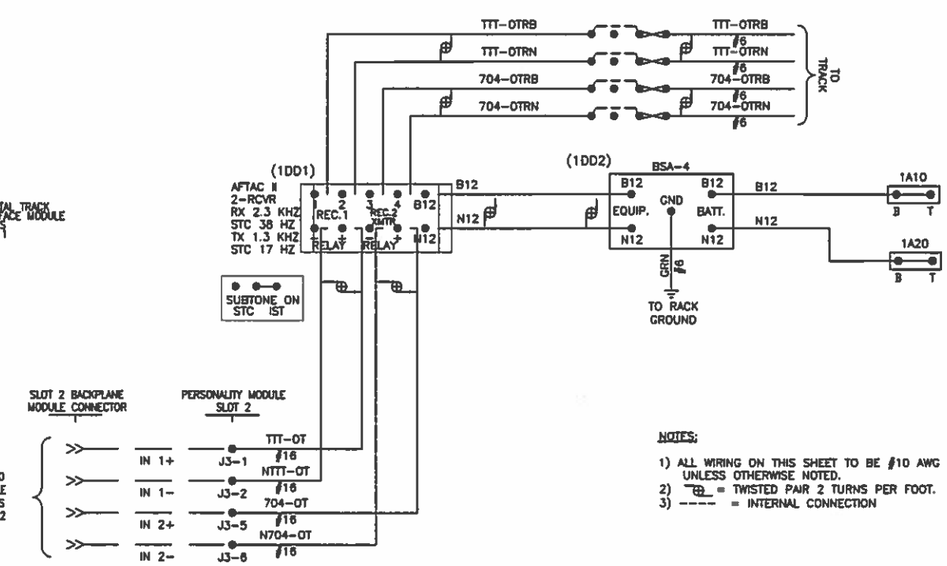

NOTES:

1) ALL WIRING ON THIS SHEET TO BE #10 AWG UNLESS OTHERWISE NOTED.
2) = TWISTED PAIR 2 TURNS PER FOOT.
3) ---- = INTERNAL CONNECTION

REV	DATE	DESCRIPTION
1	03/06/15	AS DESIGNED

GETS
Global Signaling

Designed By:	BPC
Drawn By:	BPC
Checked By:	BDW
Approved By:	AEB

TTCI

TTT HOUSE T-1

TRACK CIRCUITS

Scale:	NTS
CADD File Name:	T1004.DWG
Submitted Date:	03/06/15
Sheet No.	004

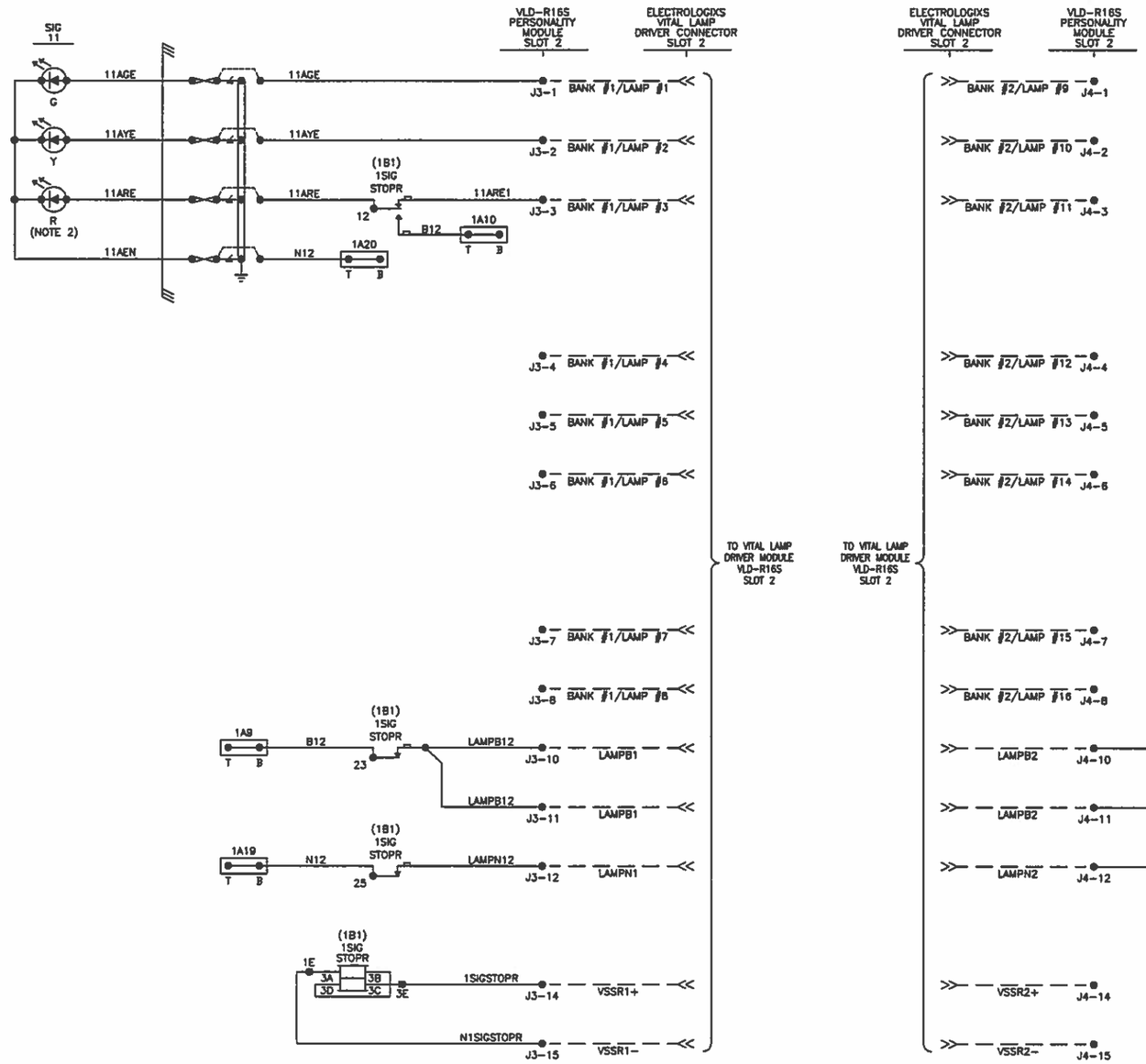

NOTES:

1) ALL WIRING ON THIS SHEET TO BE #12 AWG UNLESS OTHERWISE NOTED.
2) SIGNALS ARE GELCORE 98 SERIES

REV	DATE	DESCRIPTION
1	03/06/15	AS DESIGNED

GETS
Global Signaling

Designed By: BPC
Drawn By: BPC
Checked By: BDW
Approved By: AEB

TTCI

TTT HOUSE T-1

SIGNAL LIGHTING CIRCUITS

Scale: NTS
CADD File Name: T1005.DWG
Submitted Date: 03/06/15
Sheet No. 005

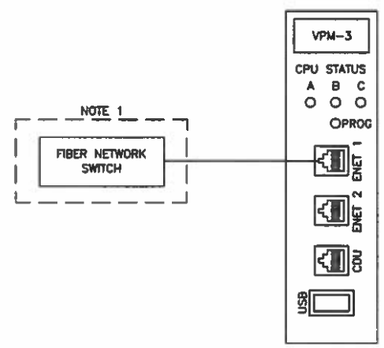

NOTES:
1) FIELD SUPPLIED

REV	DATE	DESCRIPTION
1	03/06/15	AS DESIGNED

GETS
Global Signaling

Designed By:	BPC
Drawn By:	BPC
Checked By:	BDW
Approved By:	AEB

TTCI

TTT HOUSE T-1

COMMUNICATIONS

Scale:	NTS
CADD File Name:	T1006.DWG
Submitted Date:	03/06/15
Sheet No.	006

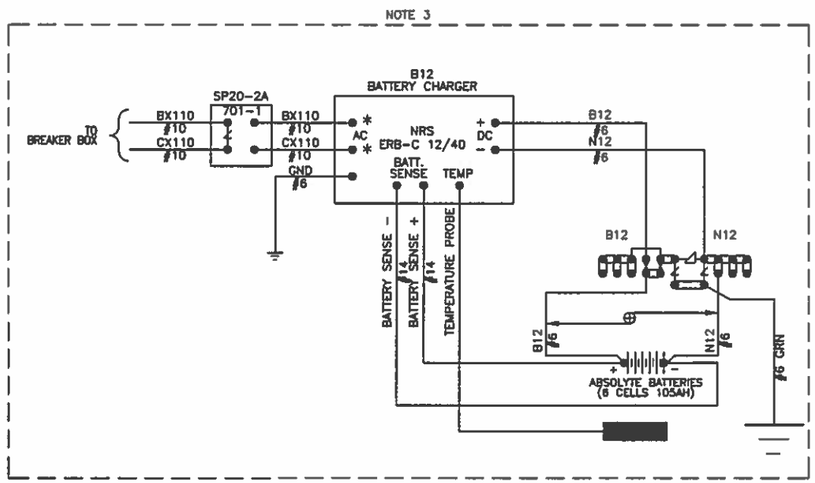

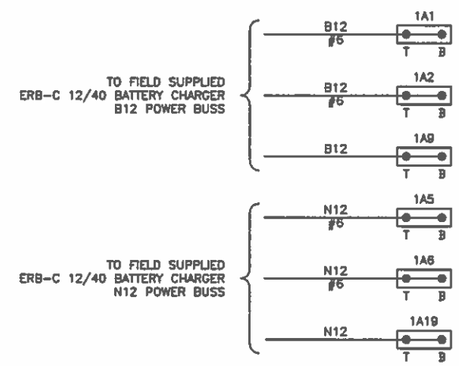

NOTES:

1) ALL SIGNAL WIRING ON THIS SHEET TO BE #10 AWG UNLESS OTHERWISE NOTED.
2) = TWISTED PAIR 2 TURNS PER FOOT.
3) FIELD SUPPLIED

REV	DATE	DESCRIPTION
1	03/06/15	AS DESIGNED

GETS
Global Signaling

Designed By:	BPC
Drawn By:	BPC
Checked By:	BDW
Approved By:	AEB

TTCI

TTT HOUSE T-1

POWER DISTRIBUTION CIRCUITS

Scale:	NTS
CADD File Name:	T1007.DWG
Submitted Date:	03/06/15
Sheet No.	007

VII-2S PERSONALITY MODULE (SLOT 1)

TK 1+	10TB	X	1
TK 1−	10TN	X	2
			3
TK 2+	1TB	X	4
TK 2−	1TN	X	5
			6
			7

J3

CAB1+	10-100CEN	X	1
CAB1−			2
			3
CAB2+	1-100CEN	X	4
CAB2−			5
			6
IN 1+	B12	X	7
IN 1−	N12	X	8
			9
IN 2+	B12	X	10
IN 2−	N12	X	11

J4

VLD-R16S PERSONALITY MODULE (SLOT 2)

BANK 1

LAMP1	11AGE	X	1
LAMP2	11AYE	X	2
LAMP3	11ARE1	X	3
LAMP4			4
LAMP5			5
LAMP6			6
LAMP7			7
LAMP8			8
			9
LAMPB1	LAMPB12	X	10
LAMPB1	LAMPB12	X	11
LAMPN1	LAMPN12	X	12
			13
VSSR1+	1SIGSTOPR	X	14
VSSR1−	N1SIGSTOPR	X	15

J3

BANK 2

LAMP9			1
LAMP10			2
LAMP11			3
LAMP12			4
LAMP13			5
LAMP14			6
LAMP15			7
LAMP16			8
			9
LAMPB2	B12	X	10
LAMPB2	B12	X	11
LAMPN2	N12	X	12
			13
VSSR2+			14
VSSR2−			15

J4

PERSONALITY MODULE LEGEND

TERMINAL LABEL → XXX | XXXX | X | ← PIN NUMBER

APPLICATION DESCRIPTION

WIRE PRESENT

REV	DATE	DESCRIPTION
1	03/06/15	AS DESIGNED

GETS Global Signaling

Designed By:	BPC
Drawn By:	BPC
Checked By:	BDW
Approved By:	AEB

TTCI

TTT HOUSE T-1

ELECTROLOGIXS 4-SLOT MODULE CONNECTOR USAGE

Scale:	NTS
CADD File Name:	T1008.DWG
Submitted Date:	03/06/15
Sheet No.	008

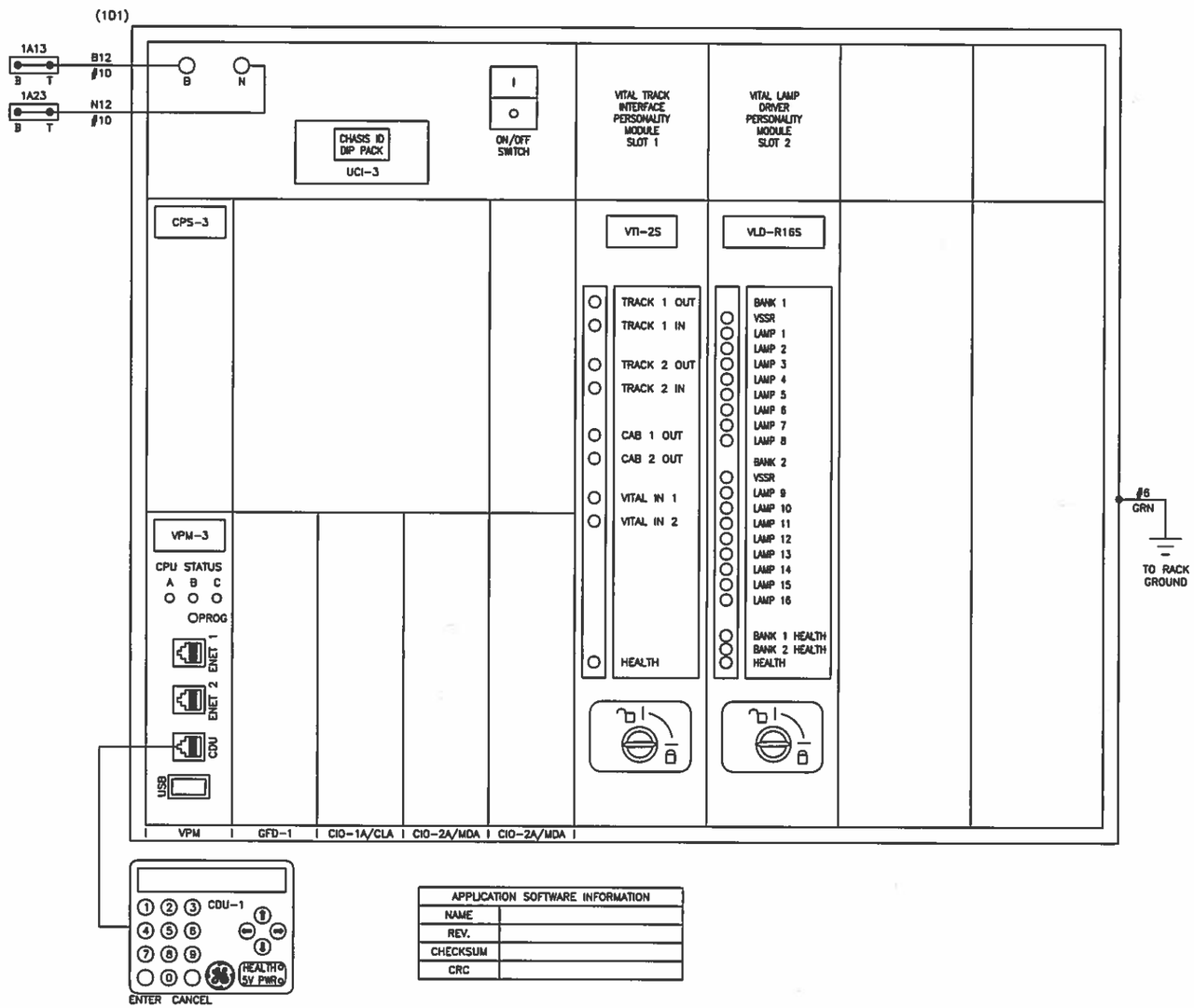

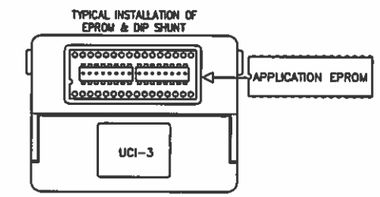

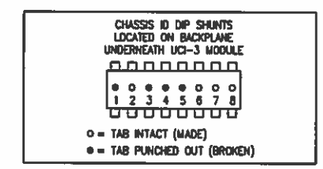

VITAL SELECTION ID-N/A

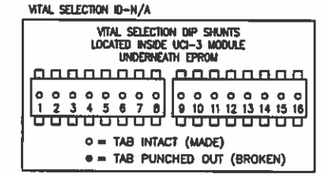

APPLICATION SOFTWARE INFORMATION	
NAME	
REV.	
CHECKSUM	
CRC	

NOTES:

CDU-1 = CONTROL DISPLAY UNIT
CPS-3 = CENTRAL POWER SUPPLY
VPM-3 = VITAL PERIPHERAL MASTER MODULE
UCI-3 = CHASSIS INFORMATION MODULE
VTI-2S = VITAL TRACK INTERFACE
VLD-R16S = VITAL LAMP DRIVER MODULE
VIO-86S = VITAL INPUTS/OUTPUTS
CIO-CLA = COMMUNICATION INPUT/OUTPUT CURRENT LOOP ADAPTER

REV	DATE	DESCRIPTION
2	03/30/15	CORRECTED TYPO. VLD-R16S IS IN SLOT 2.
1	03/06/15	AS DESIGNED

GETS
Global Signaling

Designed By:	BPC
Drawn By:	BPC
Checked By:	BDW
Approved By:	AEB

TTCI

TTT HOUSE T-1

ELECTROLOGIXS 4-SLOT
HARDWARE CONFIGURATION

Scale:	NTS
CADD File Name:	T1009.DWG
Submitted Date:	03/06/15
Sheet No.	009

SYSTEM CONFIGURATION				
DATE/TIME	SETTING MADE WHEN USING PTC CONFIGURATION			
DIAGNOSTIC PORT				
ETHERNET CONFIG.				
OFFICE CONFIG	NA			
LCP CONFIG	ENABLED	TRUE		
VITAL REMOTE CONFIG	LOCAL PORT	REMOTE PORT	REMOTE PORT CONFIG	
	ETHERNET PORT 1 192.168.40.71	1	IP	192.168.40.14
			PORT	8290
			LOCAL NETWORK ID	71
			REMOTE NETWORK ID	18
			PROTOCOL	RP2000
			DATE/TIME UPDATE	ENABLED
			MAC	DISABLED
			KEY IN USE	NO
	ETHERNET PORT 2 192.168.1.12	NA	NA	NA
	SERIAL PORT 2	NA		
	SERIAL PORT 3	NA		
TRACK CONFIG	SLOT	TRACK	CONFIGURATION	
	SLOT 1: 10T_T11	1	TRANSMITTER	4V
			RECEIVER	0.5A
			CODE 5 TYPE	ALT 5
	SLOT 1: 1T_T11	2	TRANSMITTER	4V
			RECEIVER	0.5A
			CODE 5 TYPE	ALT 5

NOTES:
1. FINAL VITAL CONFIGURATION SETTINGS ARE SUBJECT TO CHANGE IN ACCORDANCE WITH SOFTWARE UPGRADES. FINAL VITAL CONFIGURATION SETTINGS TO BE UPDATED ON AS-IN-SERVICE.

REV	DATE	DESCRIPTION
1	03/06/15	AS DESIGNED

GETS
Global Signaling

Designed By: BPC
Drawn By: BPC
Checked By: BDW
Approved By: AEB

TTCI

TTT HOUSE T-1

ELECTROLOGIXS 4-SLOT CONFIGURATION SETTINGS

Scale: NTS
CADD File Name: T1010.DWG
Submitted Date: 03/06/15
Sheet No. 010

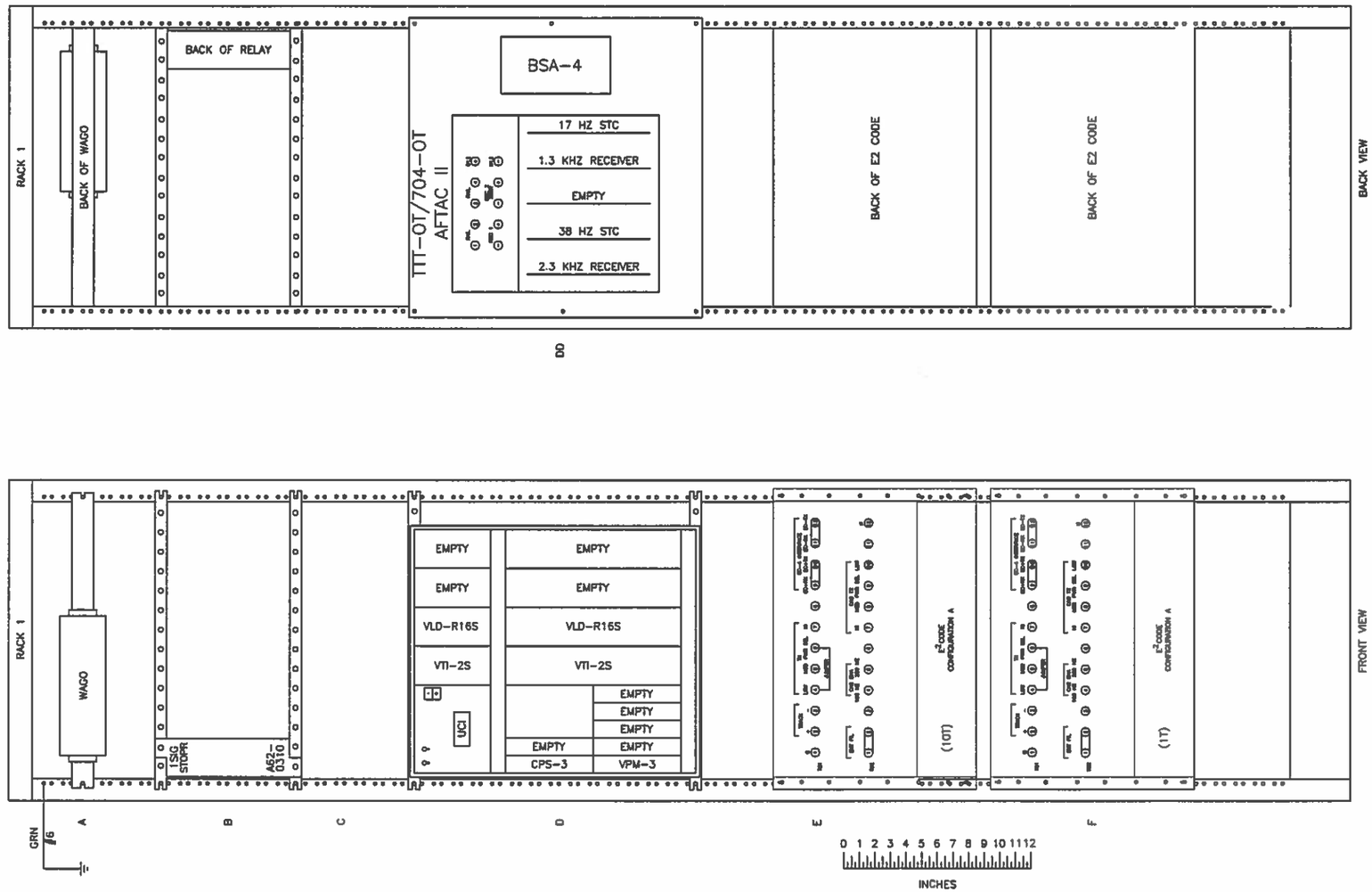

REV	DATE	DESCRIPTION
1	03/06/15	AS DESIGNED

GETS
Global Signaling

Designed By:	BPC
Drawn By:	BPC
Checked By:	BDW
Approved By:	AEB

TTCI

TTT HOUSE T-1

RACK 1 LAYOUT

Scale:	NTS
CADD File Name:	T1011.DWG
Submitted Date:	03/06/15
Sheet No.	011

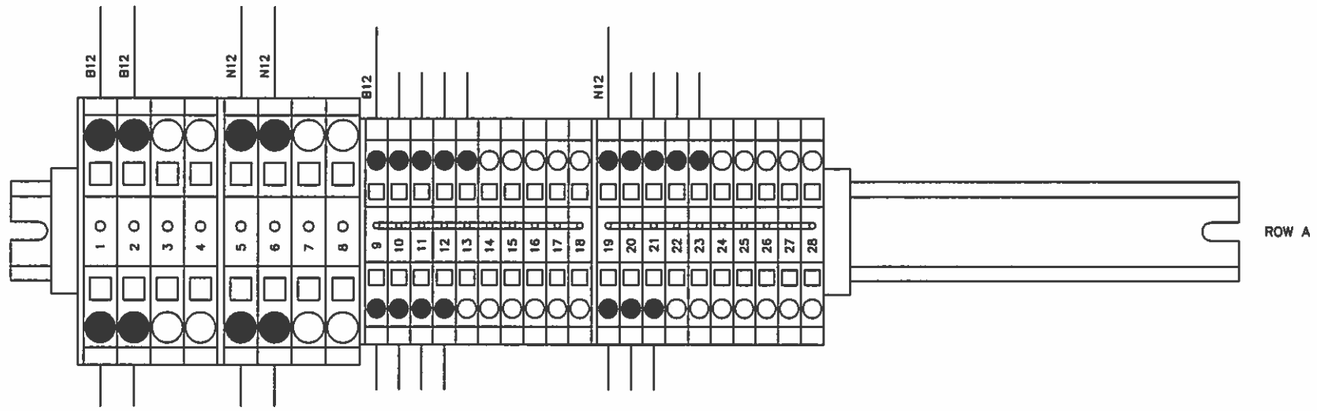

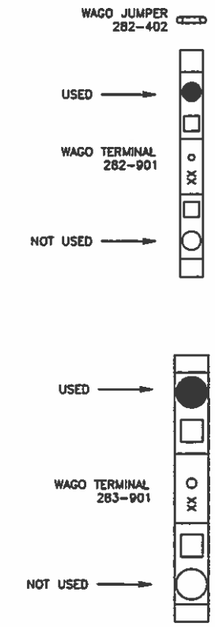

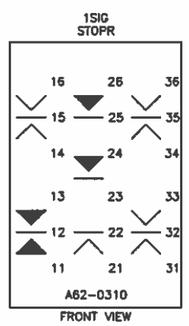

REV	DATE	DESCRIPTION
1	03/06/15	AS DESIGNED

GETS
Global Signaling

Designed By:	BPC
Drawn By:	BPC
Checked By:	BDW
Approved By:	AEB

TTCI

TTT HOUSE T-1

WAGO & RELAY LAYOUT
RACK 1, ROW A & B

Scale:	NTS
CADD File Name:	T1012.DWG
Submitted Date:	03/06/15
Sheet No.	012

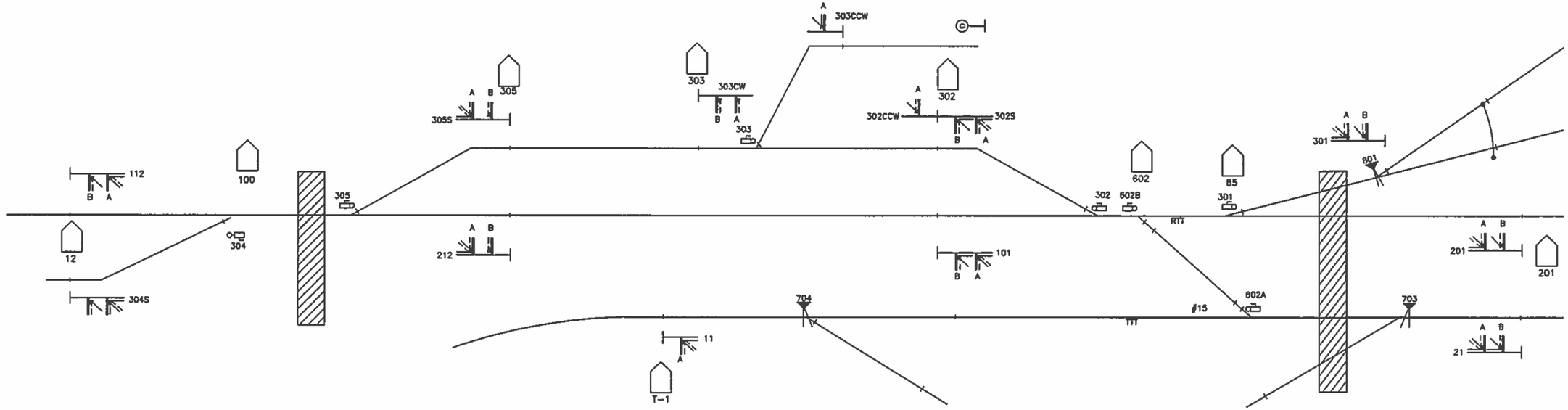

HOUSE_12

RACK 1	
IP ADDRESS: 192.168.40.11	
REMOTE 1	
RP2000 PORT	8280
NETWORK ID	10
REMOTE 2	
RP2000 PORT	8281
NETWORK ID	11
REMOTE 3	
RP2000 PORT	8282
NETWORK ID	12
REMOTE 4	
RP2000 PORT	8288
NETWORK ID	13
REMOTE 5	
RP2000 PORT	8285
NETWORK ID	14

TO HOUSE < R48

POST_100

RACK 1	
IP ADDRESS: 192.168.40.13	
REMOTE 1	
RP2000 PORT	8280
NETWORK ID	4

HOUSE_305

RACK 1	
IP ADDRESS: 192.168.40.15	
REMOTE 1	
RP2000 PORT	8281
NETWORK ID	5

HOUSE_303

RACK 1	
IP ADDRESS: 192.168.40.12	
REMOTE 1	
RP2000 PORT	8285
NETWORK ID	6
REMOTE 2	
RP2000 PORT	8286
NETWORK ID	7

HOUSE_302

RACK 1	
IP ADDRESS: 192.168.40.18	
REMOTE 1	
RP2000 PORT	8283
NETWORK ID	770
REMOTE 2	
RP2000 PORT	8282
NETWORK ID	119
REMOTE 3	
RP2000 PORT	8287
NETWORK ID	15

RACK 2	
IP ADDRESS: 192.168.40.17	
REMOTE 1	
RP2000 PORT	8286
NETWORK ID	8
REMOTE 2	
RP2000 PORT	8287
NETWORK ID	9

HOUSE_602

RACK 1	
RS400 IP ADDRESS: 192.168.40.16	
RP2000 PORT	8283
NETWORK ID	16
RAW SOCKET	COM 2
VHLC RS232 PORT	B
RP2000 PORT	8284
NETWORK ID	16
RAW SOCKET	COM 4
VHLC RS232 PORT	D

HOUSE_T-1

RACK 1	
IP ADDRESS: 192.168.40.71	
REMOTE 1	
RP2000 PORT	8290
NETWORK ID	71

HOUSE_201

RACK 1	
IP ADDRESS: 192.168.40.14	
REMOTE 1	
RP2000 PORT	8284
NETWORK ID	513
REMOTE 2	
RP2000 PORT	8290
NETWORK ID	18
REMOTE 3	
RP2000 PORT	8291
NETWORK ID	19

HOUSE_T-6

RACK 1	
IP ADDRESS: 192.168.40.76	
REMOTE 1	
RP2000 PORT	8291
NETWORK ID	76

REV	DATE	DESCRIPTION
1	03/06/15	AS DESIGNED

GETS Global Signaling

Designed By: BPC
Drawn By: BPC
Checked By: BDW
Approved By: AEB

TTCI

TTT HOUSE T-1

RTT/TTT VITAL REMOTE NETWORKS

Scale: NTS
CADD File Name: T1013.DWG
Submitted Date: 03/06/15
Sheet No. 013

HOUSE T-2

REV	DATE	DESCRIPTION
2	03/30/15	UPDATES AFTER TTCI SITE SURVEY/DESIGN REVIEW
1	03/06/15	AS DESIGNED

GETS
Global Signaling

Designed By:	BPC
Drawn By:	BPC
Checked By:	BDW
Approved By:	AEB

TTCI

TTT HOUSE T-2

COVER SHEET

Scale:	NTS
CADD File Name:	T2000.DWG
Submitted Date:	03/06/15
Sheet No.	000

INDEX OF DRAWINGS			
SHT. NO.	DWG. NO.	REV.	DESCRIPTION
000	T2000.DWG	2	COVER SHEET
001	T2001.DWG	2	INDEX
002	T2002.DWG	1	TRACK & SIGNAL PLAN
003	T2003.DWG	2	CODE & ASPECT CHART
004	T2004.DWG	1	TRACK CIRCUITS
005	T2005.DWG	1	POWER DISTRIBUTION CIRCUITS
006	T2006.DWG	1	ELECTROLOGIXS 4-SLOT MODULE CONNECTOR USAGE
007	T2007.DWG	1	ELECTROLOGIXS 4-SLOT HARDWARE CONFIGURATION
008	T2008.DWG	1	ELECTROLOGIXS 4-SLOT CONFIGURATION SETTINGS
009	T2009.DWG	1	RACK 1 LAYOUT
010	T2010.DWG	1	WAGO & RELAY LAYOUT RACK 1, ROW A & B

REV	DATE	DESCRIPTION
2	03/30/15	UPDATES AFTER TTCI SITE SURVEY/DESIGN REVIEW
1	03/06/15	AS DESIGNED

GETS
Global Signaling

Designed By: BPC
Drawn By: BPC
Checked By: BDW
Approved By: AEB

TTCI

TTT HOUSE T-2

INDEX

Scale: NTS
CADD File Name: T2001.DWG
Submitted Date: 03/06/15
Sheet No. 001

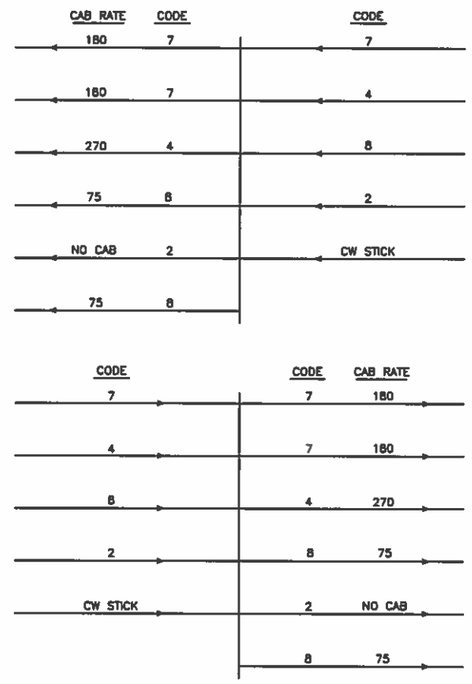

TTT CAB RATE TABLE		
NAME	DESIGNATOR	RATE
CLEAR	C	180
CAB SPEED	CS	270
APPROACH LIMITED	AL?	120
APPROACH	A	75
RESTRICTING	R	NO CAB

REV	DATE	DESCRIPTION
2	03/30/15	ADDED COUNTER-CLOCKWISE CODES
1	03/06/15	AS DESIGNED

GETS
Global Signaling

Designed By: BPC
Drawn By: BPC
Checked By: BDW
Approved By: AEB

TTCI

TTT HOUSE T-2

CODE & ASPECT CHART

Scale: NTS
CADD File Name: T2003.DWG
Submitted Date: 03/06/15
Sheet No. 003

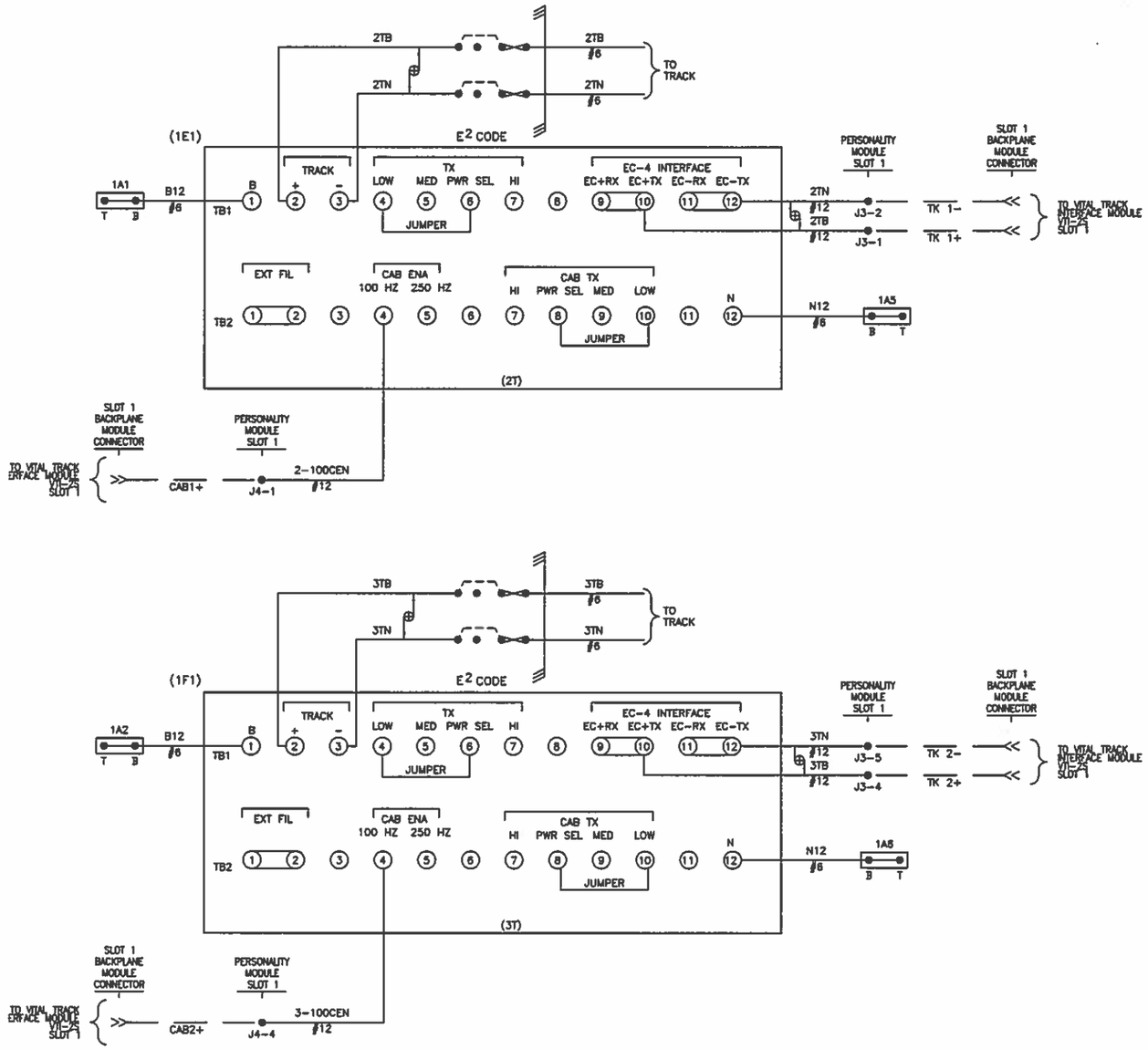

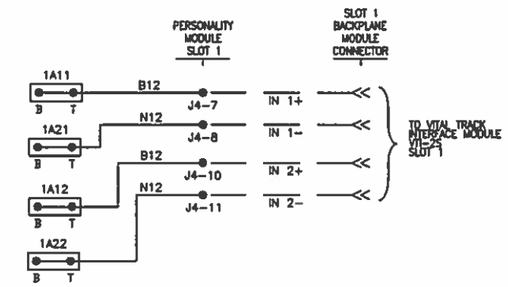

NOTES:

1) ALL WIRING ON THIS SHEET TO BE #10 AWG UNLESS OTHERWISE NOTED.
2) ⊕ = TWISTED PAIR 2 TURNS PER FOOT.
3) ---- = INTERNAL CONNECTION

REV	DATE	DESCRIPTION
1	03/06/15	AS DESIGNED

GETS Global Signaling

Designed By:	BPC
Drawn By:	BPC
Checked By:	BDW
Approved By:	AEB

TTCI

TTT HOUSE T-2

TRACK CIRCUITS

Scale:	NTS
CADD File Name:	T2004.DWG
Submitted Date:	03/06/15
Sheet No.	004

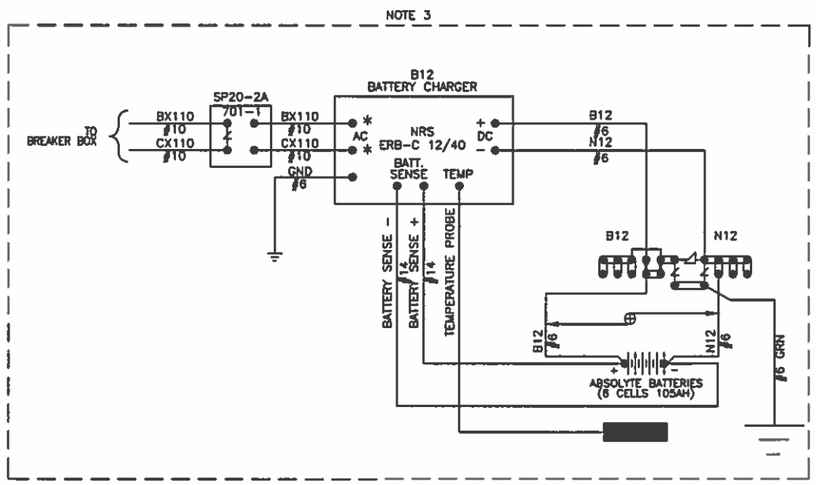

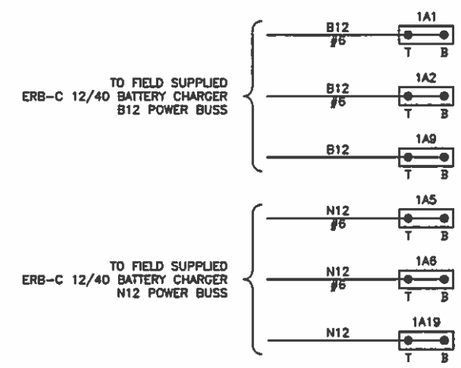

NOTES:

1) ALL SIGNAL WIRING ON THIS SHEET TO BE #10 AWG UNLESS OTHERWISE NOTED.
2) ⊕ = TWISTED PAIR 2 TURNS PER FOOT.
3) FIELD SUPPLIED

REV	DATE	DESCRIPTION
1	03/06/15	AS DESIGNED

GETS
Global Signaling

Designed By: BPC
Drawn By: BPC
Checked By: BDW
Approved By: AEB

TTCI

TTT HOUSE T-2

POWER DISTRIBUTION CIRCUITS

Scale: NTS
CADD File Name: T2005.DWG
Submitted Date: 03/06/15
Sheet No. 005

VTI-2S
PERSONALITY
MODULE
(SLOT 1)

TK 1+	2TB	X	1
TK 1−	2TN	X	2
			3
TK 2+	3TB	X	4
TK 2−	3TN	X	5
			6
			7

J3

CAB1+	2-100CEN	X	1
CAB1−			2
			3
CAB2+	3-100CEN	X	4
CAB2−			5
			6
IN 1+	B12	X	7
IN 1−	N12	X	8
			9
IN 2+	B12	X	10
IN 2−	N12	X	11

J4

PERSONALITY MODULE
LEGEND

TERMINAL LABEL → XXX | XXXX | X | X ← PIN NUMBER

APPLICATION DESCRIPTION

WIRE PRESENT

REV	DATE	DESCRIPTION
1	03/06/15	AS DESIGNED

GETS
Global Signaling

Designed By: BPC
Drawn By: BPC
Checked By: BDW
Approved By: AEB

TTCI

TTT HOUSE T-2

ELECTROLOGIXS 4-SLOT
MODULE CONNECTOR USAGE

Scale: NTS
CADD File Name: T2006.DWG
Submitted Date: 03/06/15
Sheet No. 006

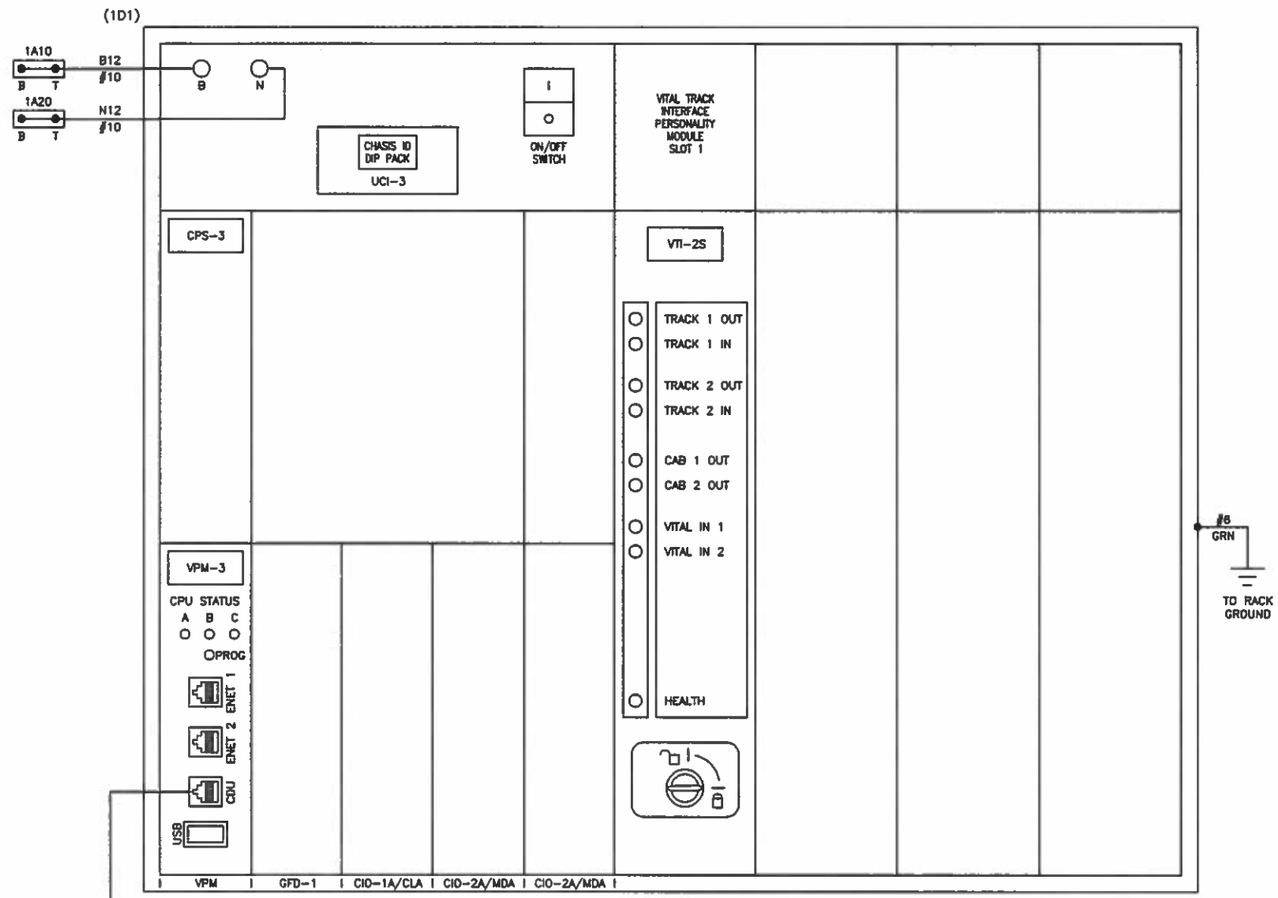

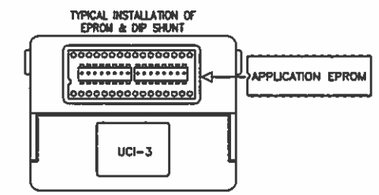

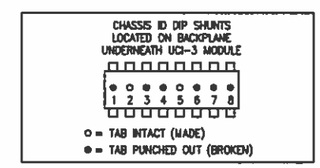

VITAL SELECTION ID-N/A

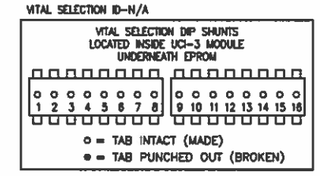

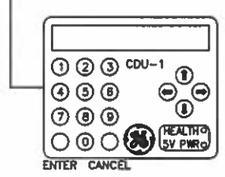

APPLICATION SOFTWARE INFORMATION	
NAME	
REV.	
CHECKSUM	
CRC	

NOTES:

CDU-1 = CONTROL DISPLAY UNIT
CPS-3 = CENTRAL POWER SUPPLY
VPM-3 = VITAL PERIPHERAL MASTER MODULE
UCI-3 = CHASSIS INFORMATION MODULE
VTI-2S = VITAL TRACK INTERFACE
VLD-R16S = VITAL LAMP DRIVER MODULE
VIO-86S = VITAL INPUTS/OUTPUTS
CIO-CLA = COMMUNICATION INPUT/OUTPUT CURRENT LOOP ADAPTER

REV	DATE	DESCRIPTION
1	03/06/15	AS DESIGNED

GETS
Global Signaling

Designed By: BPC
Drawn By: BPC
Checked By: BDW
Approved By: AEB

TTCI

TTT HOUSE T-2

ELECTROLOGIXS 4-SLOT
HARDWARE CONFIGURATION

Scale: NTS
CADD File Name: T2007.DWG
Submitted Date: 03/06/15
Sheet No. 007

SYSTEM CONFIGURATION				
DATE/TIME	SETTING MADE WHEN USING PTC CONFIGURATION			
DIAGNOSTIC PORT				
ETHERNET CONFIG.				
OFFICE CONFIG	NA			
LCP CONFIG	ENABLED	TRUE		
VITAL REMOTE CONFIG	LOCAL PORT	REMOTE PORT	REMOTE PORT CONFIG	
	ETHERNET PORT 1 192.168.40.72	NA	NA	NA
	ETHERNET PORT 2 192.168.1.12	NA	NA	NA
	SERIAL PORT 2	NA		
	SERIAL PORT 3	NA		
TRACK CONFIG	SLOT	TRACK	CONFIGURATION	
	SLOT 1: 2T_TI1	1	TRANSMITTER	4V
			RECEIVER	0,5A
			CODE 5 TYPE	ALT 5
	SLOT 1: 3T_TI1	2	TRANSMITTER	4V
			RECEIVER	0.5A
			CODE 5 TYPE	ALT 5

NOTES:
1. FINAL VITAL CONFIGURATION SETTINGS ARE SUBJECT TO CHANGE IN ACCORDANCE WITH SOFTWARE UPGRADES. FINAL VITAL CONFIGURATION SETTINGS TO BE UPDATED ON AS-IN-SERVICE.

REV	DATE	DESCRIPTION
1	03/06/15	AS DESIGNED

GETS
Global Signaling

Designed By: BPC
Drawn By: BPC
Checked By: BDW
Approved By: AEB

TTCI

TTT HOUSE T-2

ELECTROLOGIXS 4-SLOT CONFIGURATION SETTINGS

Scale: NTS
CADD File Name: T2008.DWG
Submitted Date: 03/06/15
Sheet No. 008

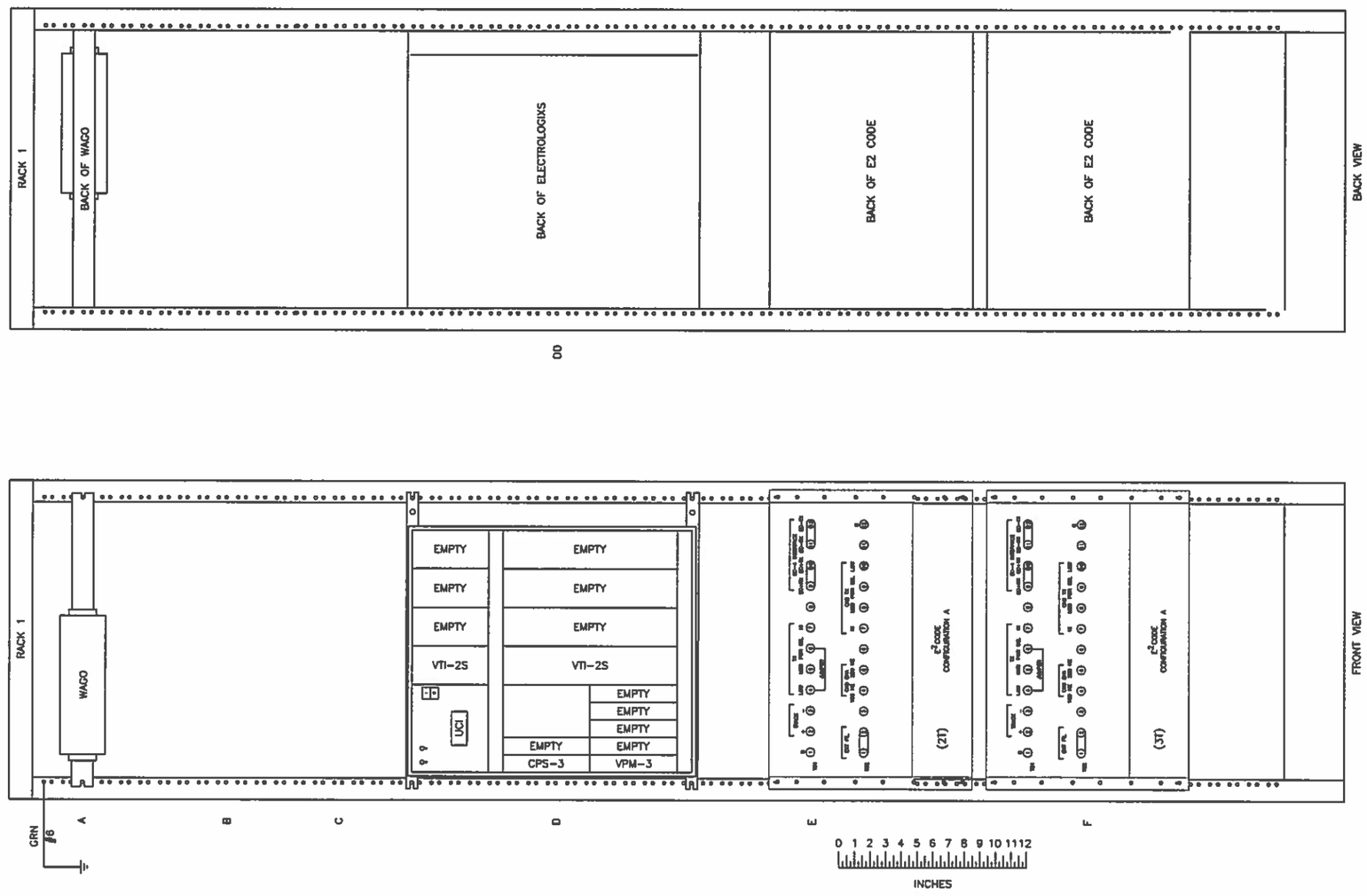

REV	DATE	DESCRIPTION
1	03/06/15	AS DESIGNED

GETS
Global Signaling

Designed By:	BPC
Drawn By:	BPC
Checked By:	BDW
Approved By:	AEB

TTCI

TTT HOUSE T-2

RACK 1 LAYOUT

Scale:	NTS
CADD File Name:	T2009.DWG
Submitted Date:	03/06/15
Sheet No.	009

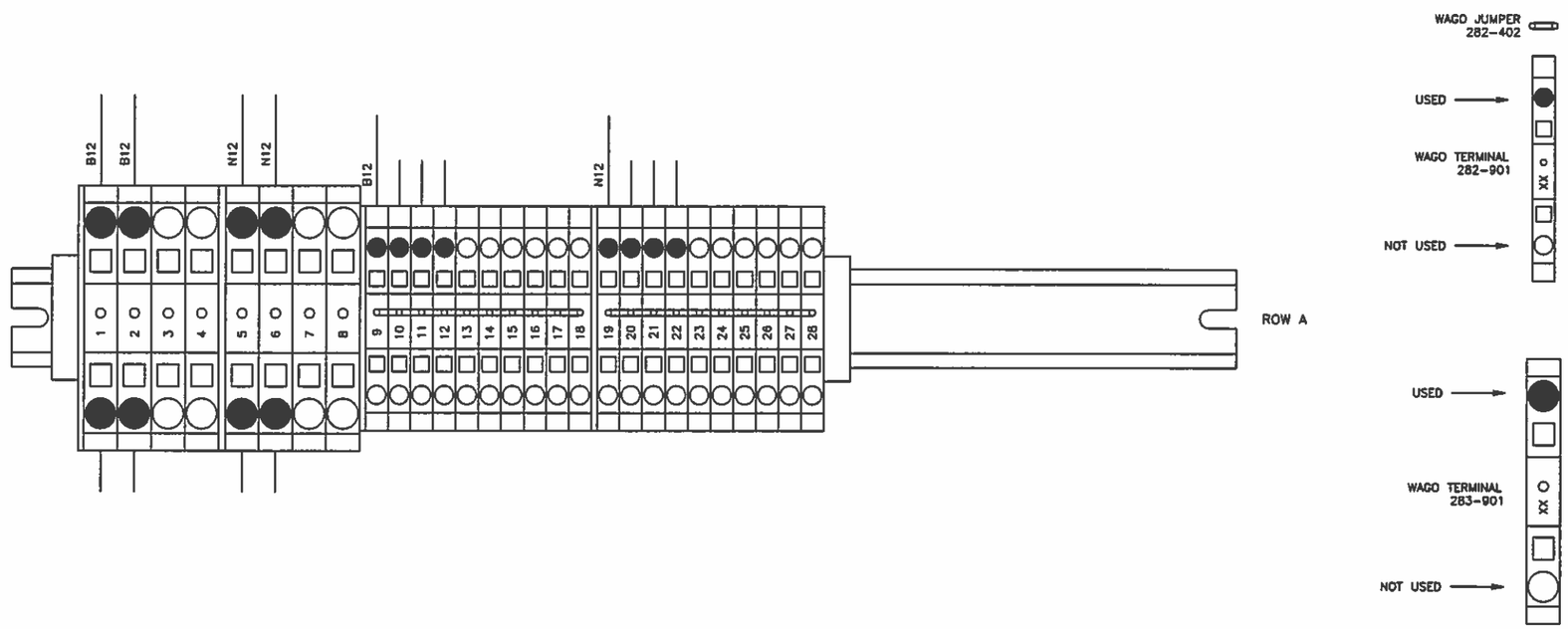

REV	DATE	DESCRIPTION
1	03/06/15	AS DESIGNED

GETS
Global Signaling

Designed By:	BPC
Drawn By:	BPC
Checked By:	BDW
Approved By:	AEB

TTCI

TTT HOUSE T-2

WAGO & RELAY LAYOUT
RACK 1, ROW A & B

Scale:	NTS
CADD File Name:	T2010.DWG
Submitted Date:	03/06/15
Sheet No.	010

HOUSE T-3

REV	DATE	DESCRIPTION
1	03/06/15	AS DESIGNED

GETS
Global Signaling

Designed By:	BPC
Drawn By:	BPC
Checked By:	BDW
Approved By:	AEB

TTCI

TTT HOUSE T-3

COVER SHEET

Scale:	NTS
CADD File Name:	T3000.DWG
Submitted Date:	03/06/15
Sheet No.	000

INDEX OF DRAWINGS			
SHT. NO.	DWG. NO.	REV.	DESCRIPTION
000	T3000.DWG	1	COVER SHEET
001	T3001.DWG	1	INDEX
002	T3002.DWG	1	TRACK & SIGNAL PLAN
003	T3003.DWG	1	CODE & ASPECT CHART
004	T3004.DWG	1	TRACK CIRCUITS
005	T3005.DWG	1	POWER DISTRIBUTION CIRCUITS
006	T3006.DWG	1	ELECTROLOGIXS 4-SLOT MODULE CONNECTOR USAGE
007	T3007.DWG	1	ELECTROLOGIXS 4-SLOT HARDWARE CONFIGURATION
008	T3008.DWG	1	ELECTROLOGIXS 4-SLOT CONFIGURATION SETTINGS
009	T3009.DWG	1	RACK 1 LAYOUT
010	T3010.DWG	1	WAGO & RELAY LAYOUT RACK 1, ROW A & B

REV	DATE	DESCRIPTION
1	03/06/15	AS DESIGNED

GETS
Global Signaling

Designed By: BPC
Drawn By: BPC
Checked By: BDW
Approved By: AEB

TTCI

TTT HOUSE T-3

INDEX

Scale: NTS
CADD File Name: T3001.DWG
Submitted Date: 03/06/15
Sheet No. 001

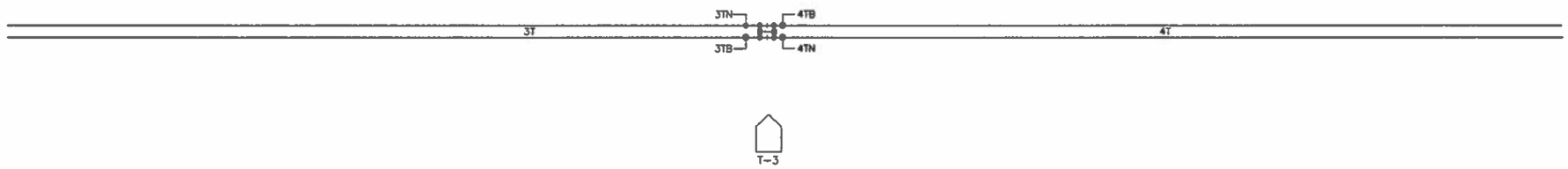

REV	DATE	DESCRIPTION
1	03/06/15	AS DESIGNED

GETS
Global Signaling

Designed By: BPC
Drawn By: BPC
Checked By: BDW
Approved By: AEB

TTCI

TTT HOUSE T-3

TRACK & SIGNAL PLAN

Scale: NTS
CADD File Name: T3002.DWG
Submitted Date: 03/06/15
Sheet No. 002

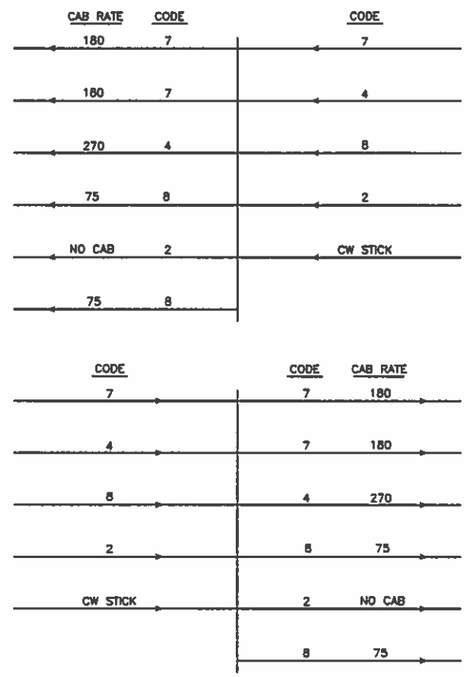

TTT CAB RATE TABLE		
NAME	DESIGNATOR	RATE
CLEAR	C	180
CAB SPEED	CS	270
APPROACH LIMITED	AL7	120
APPROACH	A	75
RESTRICTING	R	NO CAB

REV	DATE	DESCRIPTION
1	03/06/15	AS DESIGNED

GETS
Global Signaling

Designed By: BPC
Drawn By: BPC
Checked By: BDW
Approved By: AEB

TTCI

TTT HOUSE T-3

CODE & ASPECT CHART

Scale: NTS
CADD File Name: T3003.DWG
Submitted Date: 03/06/15
Sheet No. 003

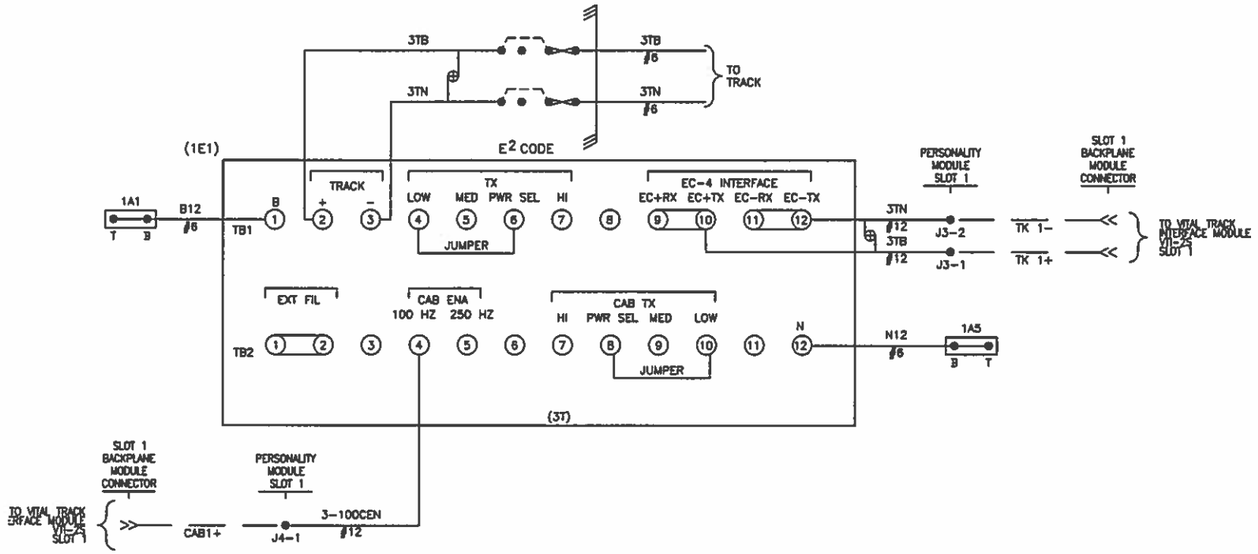

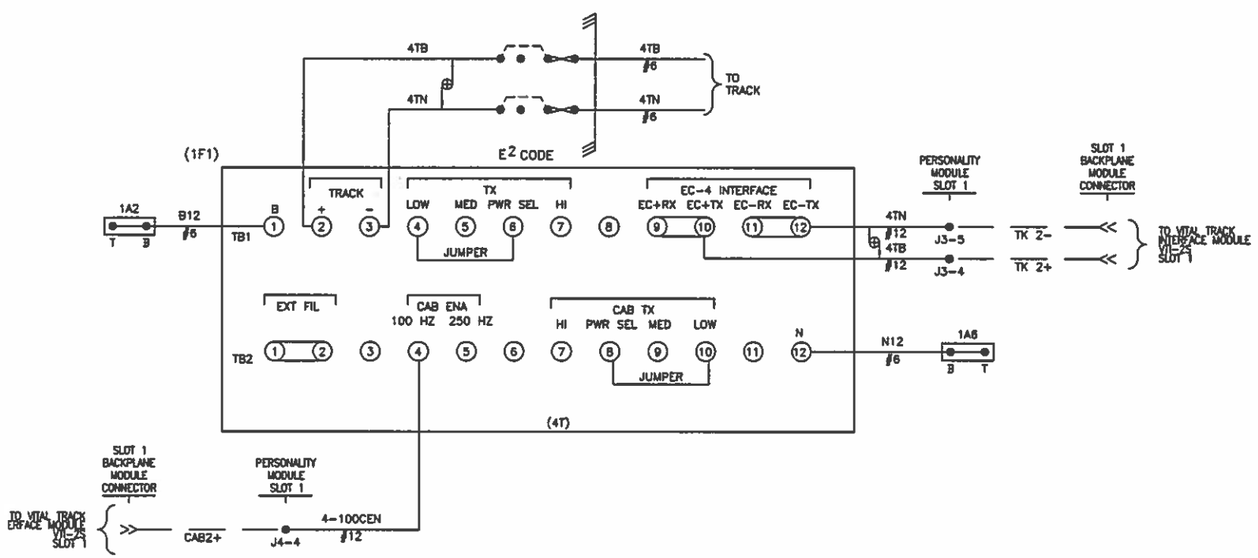

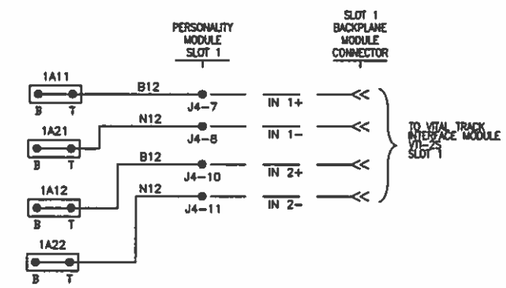

NOTES:

1) ALL WIRING ON THIS SHEET TO BE #10 AWG UNLESS OTHERWISE NOTED.
2) ⊕ = TWISTED PAIR 2 TURNS PER FOOT.
3) ---- = INTERNAL CONNECTION

REV	DATE	DESCRIPTION
1	03/06/15	AS DESIGNED

GETS
Global Signaling

Designed By:	BPC
Drawn By:	BPC
Checked By:	BDW
Approved By:	AEB

TTCI

TTT HOUSE T-3

TRACK CIRCUITS

Scale:	NTS
CADD File Name:	T3004.DWG
Submitted Date:	03/06/15
Sheet No.	004

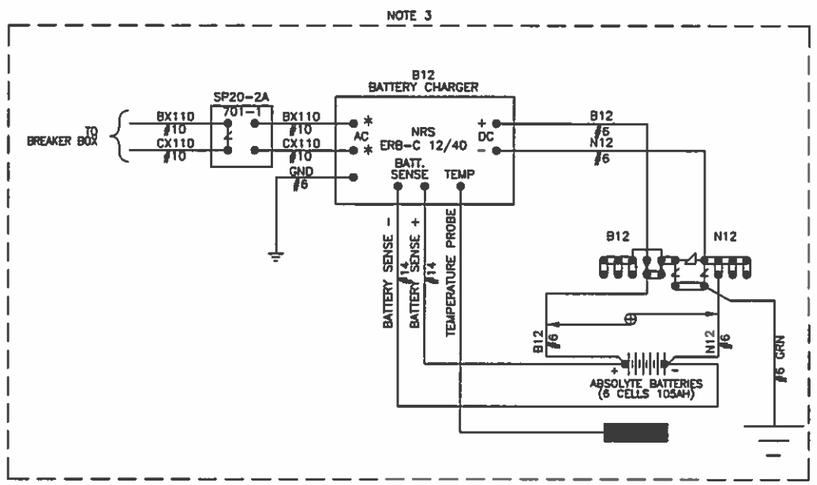

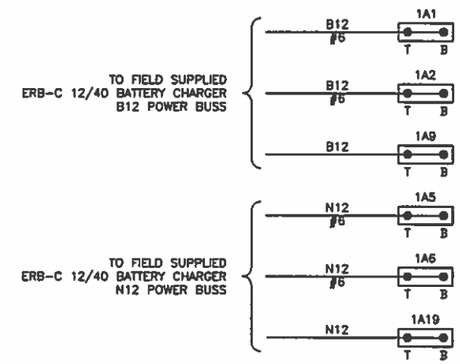

NOTES:

1) ALL SIGNAL WIRING ON THIS SHEET TO BE #10 AWG UNLESS OTHERWISE NOTED.
2) ⊕ = TWISTED PAIR 2 TURNS PER FOOT.
3) FIELD SUPPLIED

REV	DATE	DESCRIPTION
1	03/06/15	AS DESIGNED

GETS
Global Signaling

Designed By:	BPC
Drawn By:	BPC
Checked By:	BDW
Approved By:	AEB

TTCI

TTT HOUSE T-3

POWER DISTRIBUTION CIRCUITS

Scale:	NTS
CADD File Name:	T3005.DWG
Submitted Date:	03/06/15
Sheet No.	005

VTI-2S
PERSONALITY
MODULE
(SLOT 1)

TK 1+	3TB	X	1
TK 1−	3TN	X	2
			3
TK 2+	4TB	X	4
TK 2−	4TN	X	5
			6
			7

J3

CAB1+	3−100CEN	X	1
CAB1−			2
			3
CAB2+	4−100CEN	X	4
CAB2−			5
			6
IN 1+	B12	X	7
IN 1−	N12	X	8
			9
IN 2+	B12	X	10
IN 2−	N12	X	11

J4

PERSONALITY MODULE
LEGEND

TERMINAL LABEL → XXX | XXXX | X | X ← PIN NUMBER

APPLICATION DESCRIPTION

WIRE PRESENT

REV	DATE	DESCRIPTION
1	03/06/15	AS DESIGNED

GETS
Global Signaling

Designed By:	BPC
Drawn By:	BPC
Checked By:	BDW
Approved By:	AEB

TTCI

TTT HOUSE T−3

ELECTROLOGIXS 4−SLOT
MODULE CONNECTOR USAGE

Scale:	NTS
CADD File Name:	T3006.DWG
Submitted Date:	03/06/15
Sheet No.	006

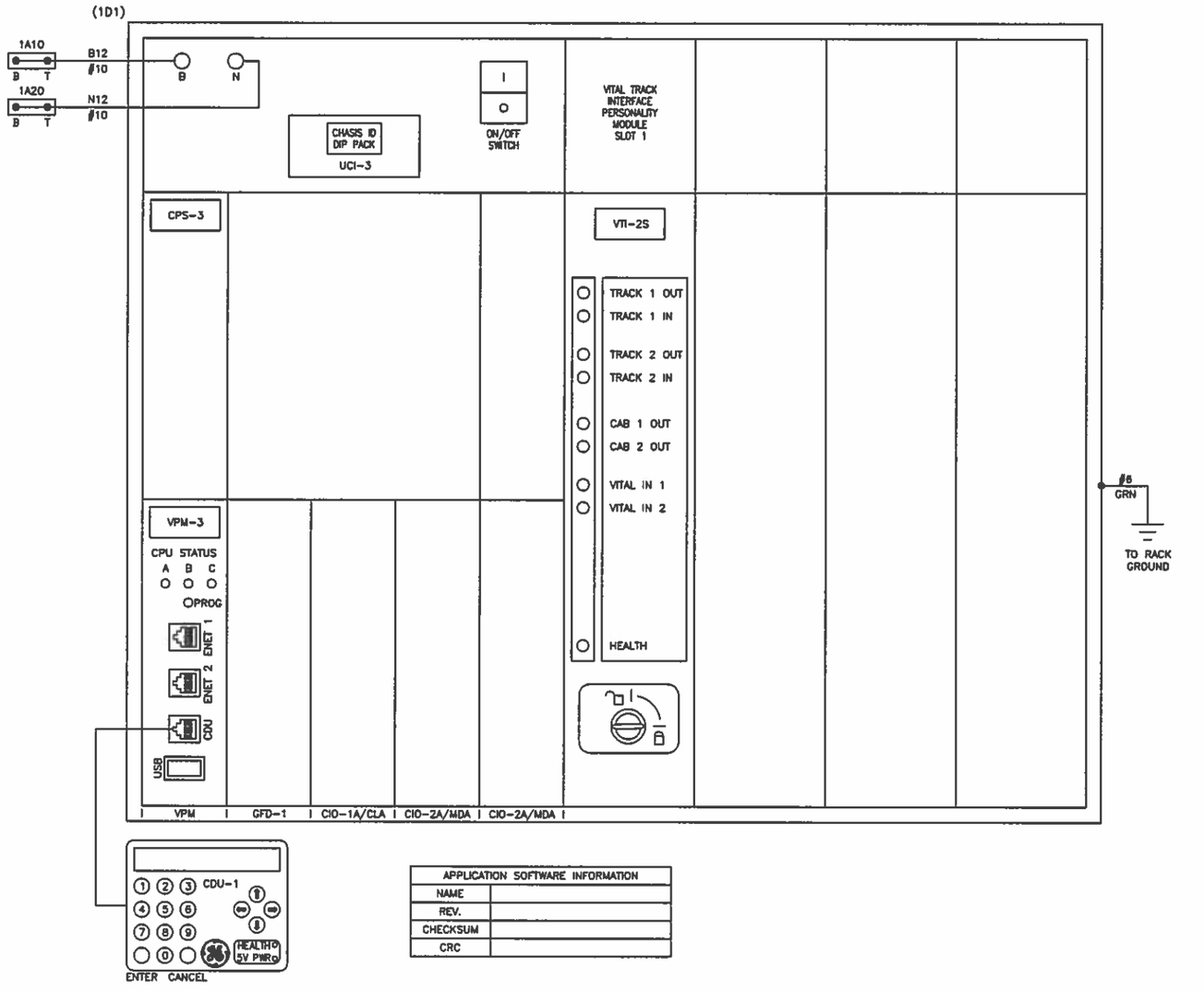

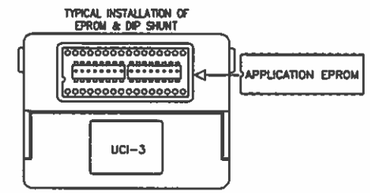

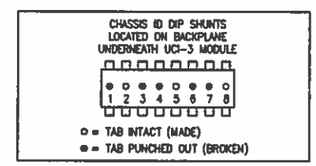

VITAL SELECTION ID-N/A

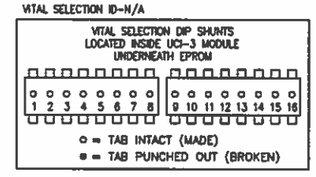

APPLICATION SOFTWARE INFORMATION	
NAME	
REV.	
CHECKSUM	
CRC	

NOTES:

CDU-1 = CONTROL DISPLAY UNIT
CPS-3 = CENTRAL POWER SUPPLY
VPM-3 = VITAL PERIPHERAL MASTER MODULE
UCI-3 = CHASSIS INFORMATION MODULE
VTI-2S = VITAL TRACK INTERFACE
VLD-R16S = VITAL LAMP DRIVER MODULE
VIO-B6S = VITAL INPUTS/OUTPUTS
CIO-CLA = COMMUNICATION INPUT/OUTPUT CURRENT LOOP ADAPTER

REV	DATE	DESCRIPTION
1	03/06/15	AS DESIGNED

GETS
Global Signaling

Designed By:	BPC
Drawn By:	BPC
Checked By:	BDW
Approved By:	AEB

TTCI

TTT HOUSE T-3

ELECTROLOGIXS 4-SLOT
HARDWARE CONFIGURATION

Scale:	NTS
CADD File Name:	T3007.DWG
Submitted Date:	03/06/15
Sheet No.	007

SYSTEM CONFIGURATION				
DATE/TIME	SETTING MADE WHEN USING PTC CONFIGURATION			
DIAGNOSTIC PORT				
ETHERNET CONFIG.				
OFFICE CONFIG	NA			
LCP CONFIG	ENABLED	TRUE		
VITAL REMOTE CONFIG	LOCAL PORT	REMOTE PORT	REMOTE PORT CONFIG	
	ETHERNET PORT 1 192.168.40.73	NA	NA	NA
	ETHERNET PORT 2 192.168.1.12	NA	NA	NA
	SERIAL PORT 2	NA		
	SERIAL PORT 3	NA		
TRACK CONFIG	SLOT	TRACK	CONFIGURATION	
	SLOT 1: 3T_T11	1	TRANSMITTER	4V
			RECEIVER	0.5A
			CODE 5 TYPE	ALT 5
	SLOT 1: 4T_T11	2	TRANSMITTER	4V
			RECEIVER	0.5A
			CODE 5 TYPE	ALT 5

NOTES:
1. FINAL VITAL CONFIGURATION SETTINGS ARE SUBJECT TO CHANGE IN ACCORDANCE WITH SOFTWARE UPGRADES. FINAL VITAL CONFIGURATION SETTINGS TO BE UPDATED ON AS-IN-SERVICE.

REV	DATE	DESCRIPTION
1	03/06/15	AS DESIGNED

GETS
Global Signaling

Designed By: BPC
Drawn By: BPC
Checked By: BDW
Approved By: AEB

TTCI

TTT HOUSE T-3

ELECTROLOGIXS 4-SLOT CONFIGURATION SETTINGS

Scale: NTS
CADD File Name: T3008.DWG
Submitted Date: 03/06/15
Sheet No. 008

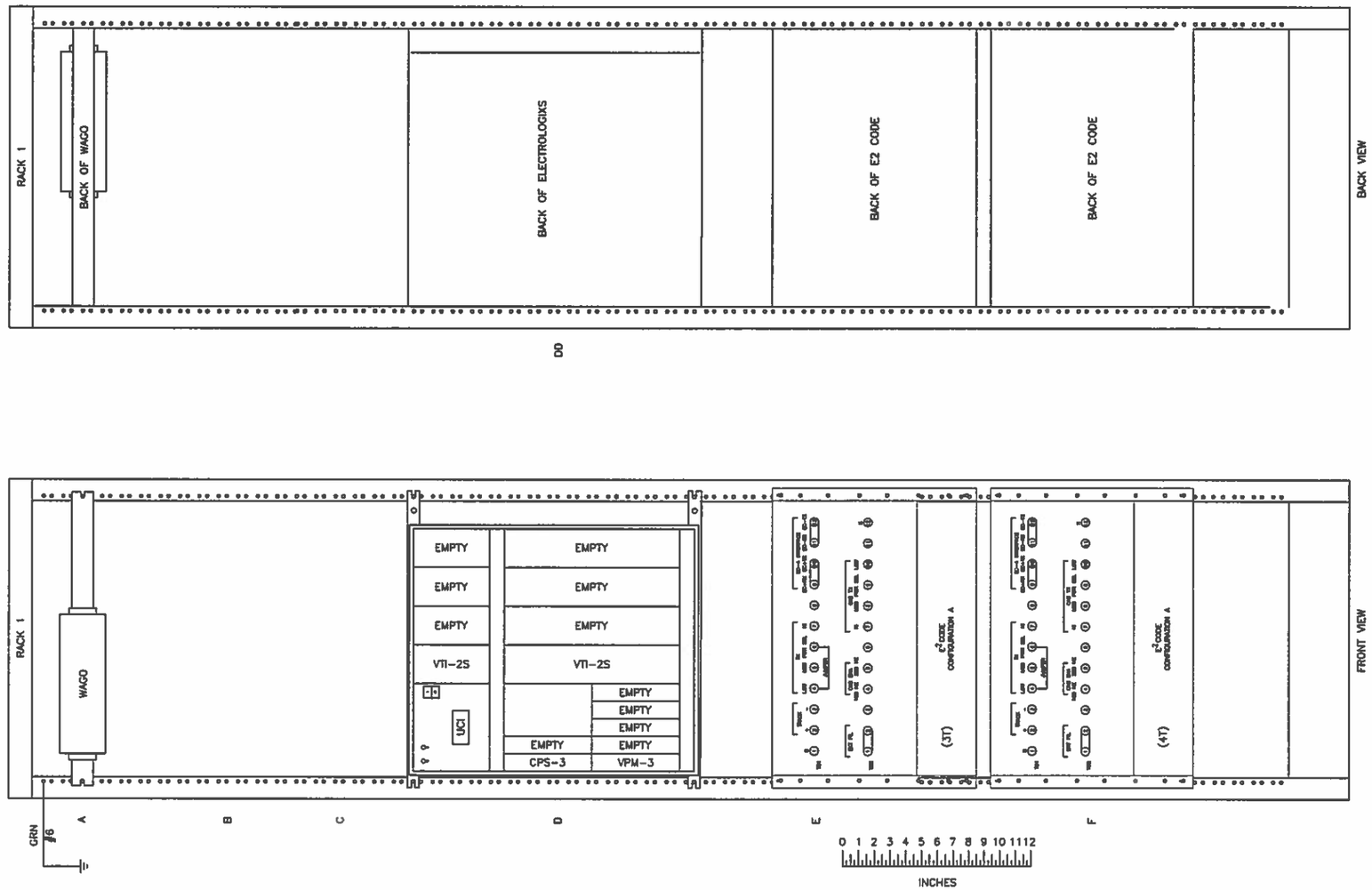

REV	DATE	DESCRIPTION
1	03/06/15	AS DESIGNED

GETS
Global Signaling

Designed By:	BPC
Drawn By:	BPC
Checked By:	BDW
Approved By:	AEB

TTCI

TTT HOUSE T-3

RACK 1 LAYOUT

Scale:	NTS
CADD File Name:	T3009.DWG
Submitted Date:	03/06/15
Sheet No.	009

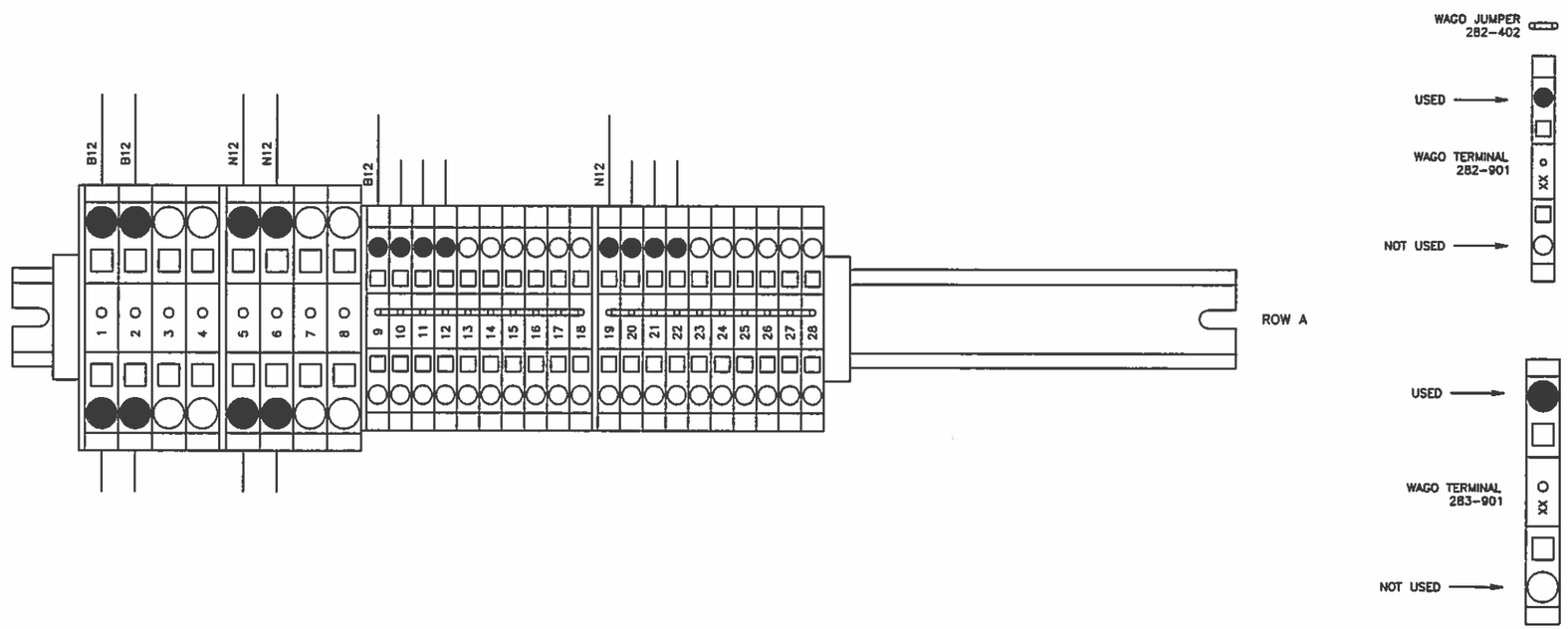

REV	DATE	DESCRIPTION
1	03/06/15	AS DESIGNED

GETS
Global Signaling

Designed By:	BPC
Drawn By:	BPC
Checked By:	BDW
Approved By:	AEB

TTCI

TTT HOUSE T-3

WAGO & RELAY LAYOUT
RACK 1, ROW A & B

Scale:	NTS
CADD File Name:	T3010.DWG
Submitted Date:	03/06/15
Sheet No.	010

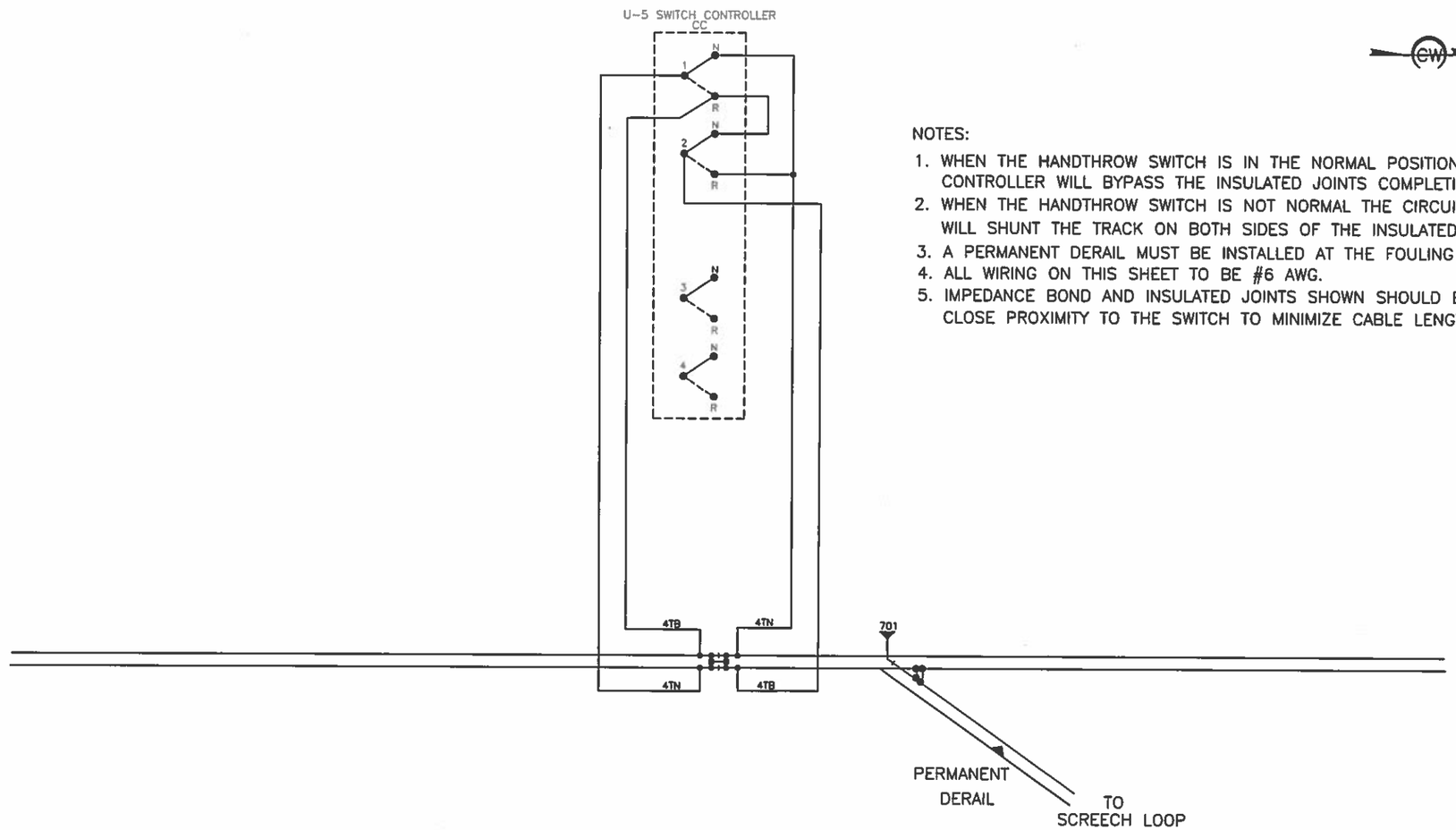

NOTES:

1. WHEN THE HANDTHROW SWITCH IS IN THE NORMAL POSITION THE CIRCUIT CONTROLLER WILL BYPASS THE INSULATED JOINTS COMPLETING THE TRACK CIRCUIT.
2. WHEN THE HANDTHROW SWITCH IS NOT NORMAL THE CIRCUIT CONTROLLER WILL SHUNT THE TRACK ON BOTH SIDES OF THE INSULATED JOINT.
3. A PERMANENT DERAIL MUST BE INSTALLED AT THE FOULING POINT.
4. ALL WIRING ON THIS SHEET TO BE #6 AWG.
5. IMPEDANCE BOND AND INSULATED JOINTS SHOWN SHOULD BE ADDED IN CLOSE PROXIMITY TO THE SWITCH TO MINIMIZE CABLE LENGTH.

REV	DATE	DESCRIPTION
2	03/30/15	UPDATES FROM SITE SURVEY/PLAN REVIEWS
1	03/11/15	AS DESIGNED

GETS
Global Signaling

Designed By: BPC
Drawn By: BPC
Checked By: BDW
Approved By: AEB

TTCI

TTT
HANDTHROW SWITCH
701

Scale: NTS
CADD File Name: TSW701.DWG
Submitted Date: 03/11/15
Sheet No. 000

HOUSE T-4

REV	DATE	DESCRIPTION
1	03/11/15	AS DESIGNED

GETS
Global Signaling

Designed By:	BPC
Drawn By:	BPC
Checked By:	BDW
Approved By:	AEB

TTCI

TTT HOUSE T-4

COVER SHEET

Scale:	NTS
CADD File Name:	T4000.DWG
Submitted Date:	03/11/15
Sheet No.	000

INDEX OF DRAWINGS			
SHT. NO.	DWG. NO.	REV.	DESCRIPTION
000	T4000.DWG	1	COVER SHEET
001	T4001.DWG	1	INDEX
002	T4002.DWG	1	TRACK & SIGNAL PLAN
003	T4003.DWG	1	CODE & ASPECT CHART
004	T4004.DWG	1	TRACK CIRCUITS
005	T4005.DWG	1	POWER DISTRIBUTION CIRCUITS
006	T4006.DWG	1	ELECTROLOGIXS 4-SLOT MODULE CONNECTOR USAGE
007	T4007.DWG	1	ELECTROLOGIXS 4-SLOT HARDWARE CONFIGURATION
008	T4008.DWG	1	ELECTROLOGIXS 4-SLOT CONFIGURATION SETTINGS
009	T4009.DWG	1	RACK 1 LAYOUT
010	T4010.DWG	1	WAGO & RELAY LAYOUT RACK 1, ROW A & B

REV	DATE	DESCRIPTION
1	03/11/15	AS DESIGNED

GETS
Global Signaling

Designed By: BPC
Drawn By: BPC
Checked By: BDW
Approved By: AEB

TTCI

TTT HOUSE T-4

INDEX

Scale: NTS
CADD File Name: T4001.DWG
Submitted Date: 03/11/15
Sheet No. 001

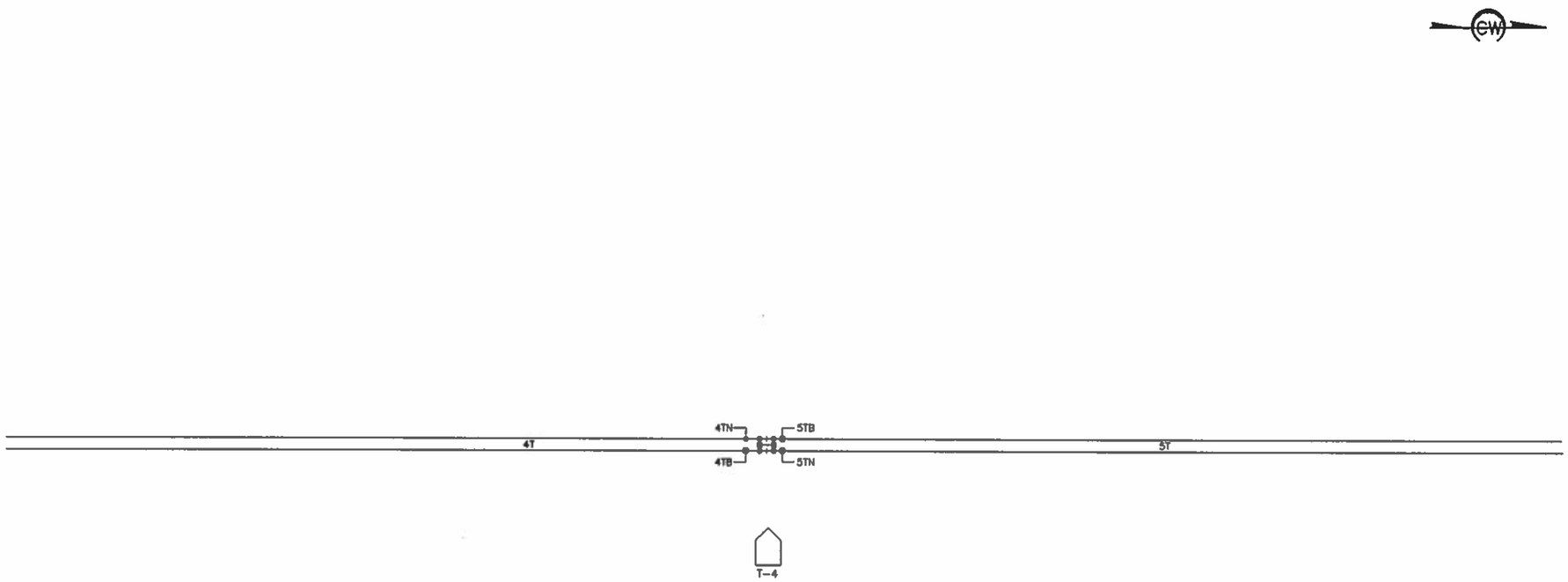

REV	DATE	DESCRIPTION
1	03/11/15	AS DESIGNED

GETS
Global Signaling

Designed By:	BPC
Drawn By:	BPC
Checked By:	BDW
Approved By:	AEB

TTCI

TTT HOUSE T-4

TRACK & SIGNAL PLAN

Scale:	NTS
CADD File Name:	T4002.DWG
Submitted Date:	03/11/15
Sheet No.	002

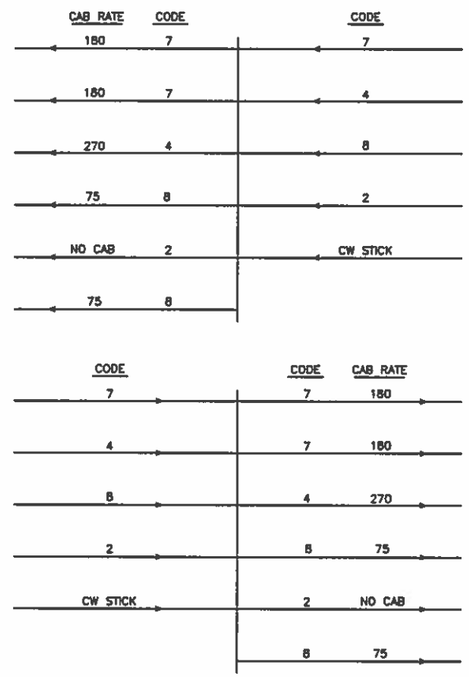

TTT CAB RATE TABLE		
NAME	DESIGNATOR	RATE
CLEAR	C	180
CAB SPEED	CS	270
APPROACH LIMITED	AL7	120
APPROACH	A	75
RESTRICTING	R	NO CAB

REV	DATE	DESCRIPTION
1	03/11/15	AS DESIGNED

GETS
Global Signaling

Designed By: BPC
Drawn By: BPC
Checked By: BDW
Approved By: AEB

TTCI

TTT HOUSE T-4

CODE & ASPECT CHART

Scale: NTS
CADD File Name: T4003.DWG
Submitted Date: 03/11/15
Sheet No. 003

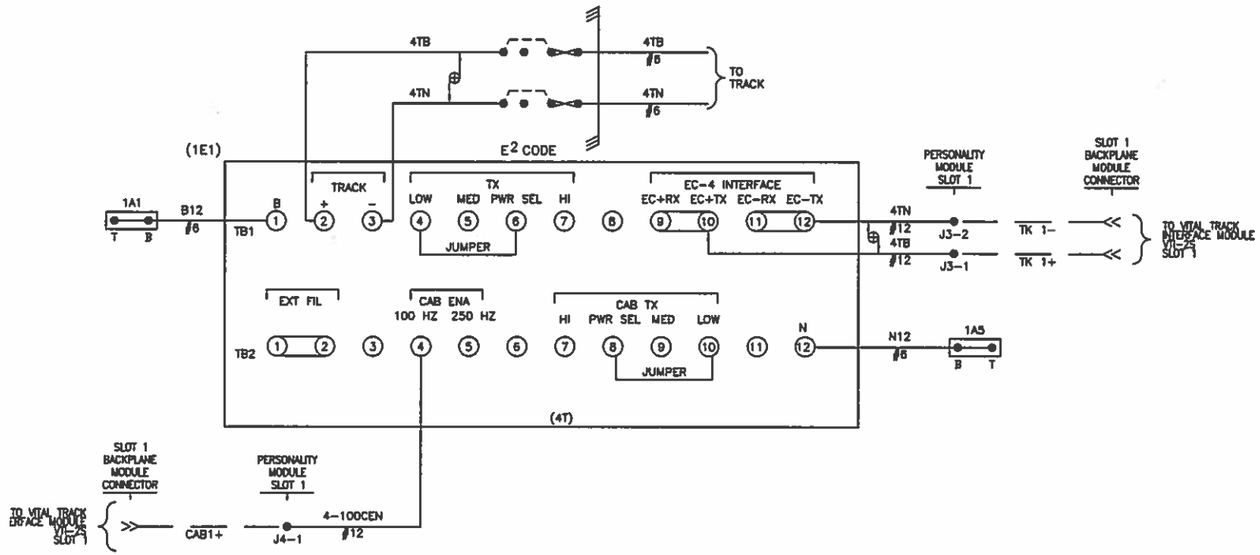

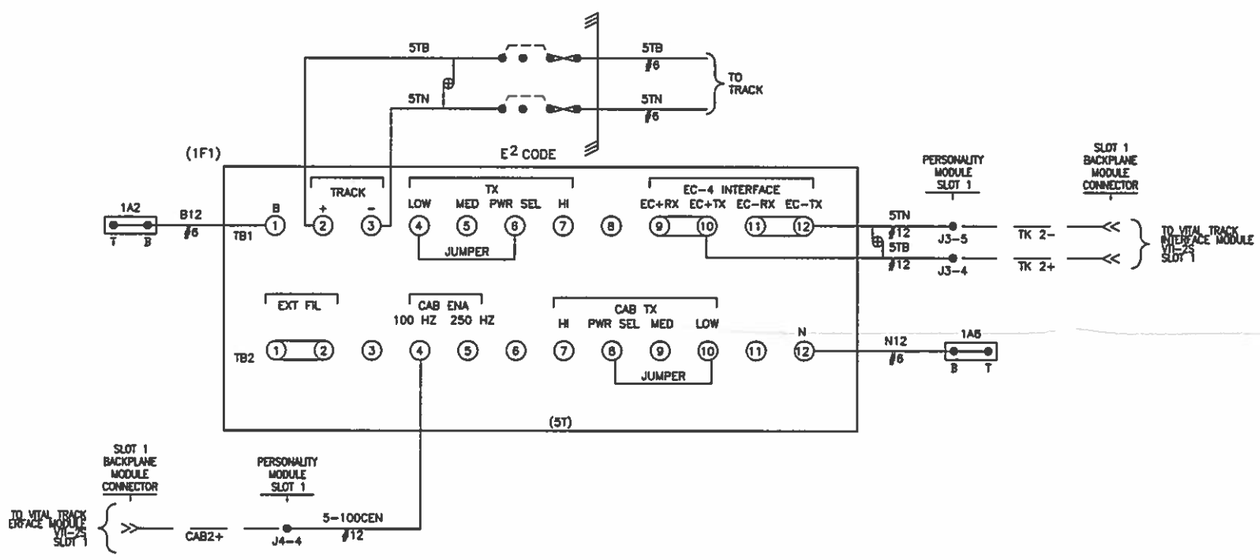

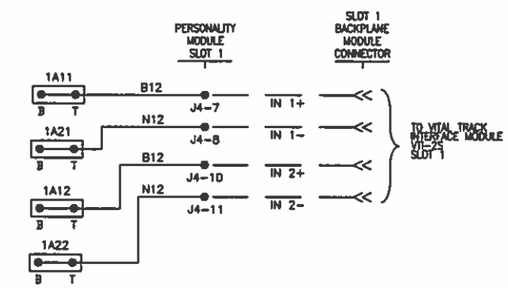

NOTES:

1) ALL WIRING ON THIS SHEET TO BE #10 AWG UNLESS OTHERWISE NOTED.
2) ⊕ = TWISTED PAIR 2 TURNS PER FOOT.
3) ---- = INTERNAL CONNECTION

REV	DATE	DESCRIPTION
1	03/11/15	AS DESIGNED

GETS Global Signaling

Designed By:	BPC
Drawn By:	BPC
Checked By:	BDW
Approved By:	AEB

TTCI

TTT HOUSE T-4

TRACK CIRCUITS

Scale:	NTS
CADD File Name:	T4004.DWG
Submitted Date:	03/11/15
Sheet No.	004

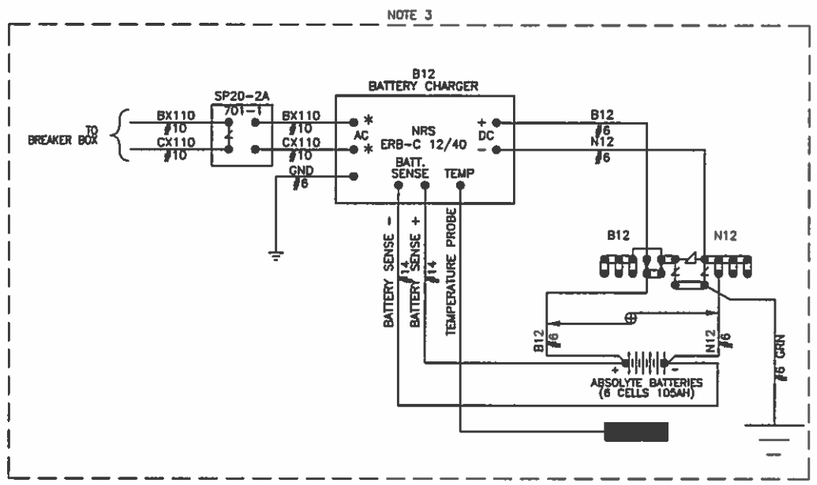

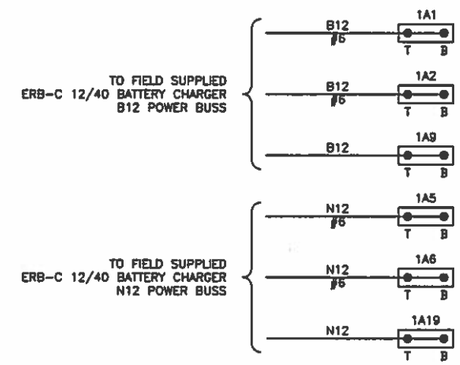

NOTES:

1) ALL SIGNAL WIRING ON THIS SHEET TO BE #10 AWG UNLESS OTHERWISE NOTED.
2) = TWISTED PAIR 2 TURNS PER FOOT.
3) FIELD SUPPLIED

REV	DATE	DESCRIPTION
1	03/11/15	AS DESIGNED

GETS
Global Signaling

Designed By:	BPC
Drawn By:	BPC
Checked By:	BDW
Approved By:	AEB

TTCI

TTT HOUSE T-4

POWER DISTRIBUTION CIRCUITS

Scale:	NTS
CADD File Name:	T4005.DWG
Submitted Date:	03/11/15
Sheet No.	005

VTI-2S
PERSONALITY
MODULE
(SLOT 1)

TK 1+	4TB	X	1
TK 1−	4TN	X	2
			3
TK 2+	5TB	X	4
TK 2−	5TN	X	5
			6
			7

J3

CAB1+	4−100CEN	X	1
CAB1−			2
			3
CAB2+	5−100CEN	X	4
CAB2−			5
			6
IN 1+	B12	X	7
IN 1−	N12	X	8
			9
IN 2+	B12	X	10
IN 2−	N12	X	11

J4

PERSONALITY MODULE
LEGEND

TERMINAL LABEL → XXX | XXXX | X | X ← PIN NUMBER

APPLICATION DESCRIPTION

WIRE PRESENT

REV	DATE	DESCRIPTION
1	03/06/15	AS DESIGNED

GETS
Global Signaling

Designed By:	BPC
Drawn By:	BPC
Checked By:	BDW
Approved By:	AEB

TTCI

TTT HOUSE T−4

ELECTROLOGIXS 4−SLOT
MODULE CONNECTOR USAGE

Scale:	NTS
CADD File Name:	T4006.DWG
Submitted Date:	03/11/15
Sheet No.	006

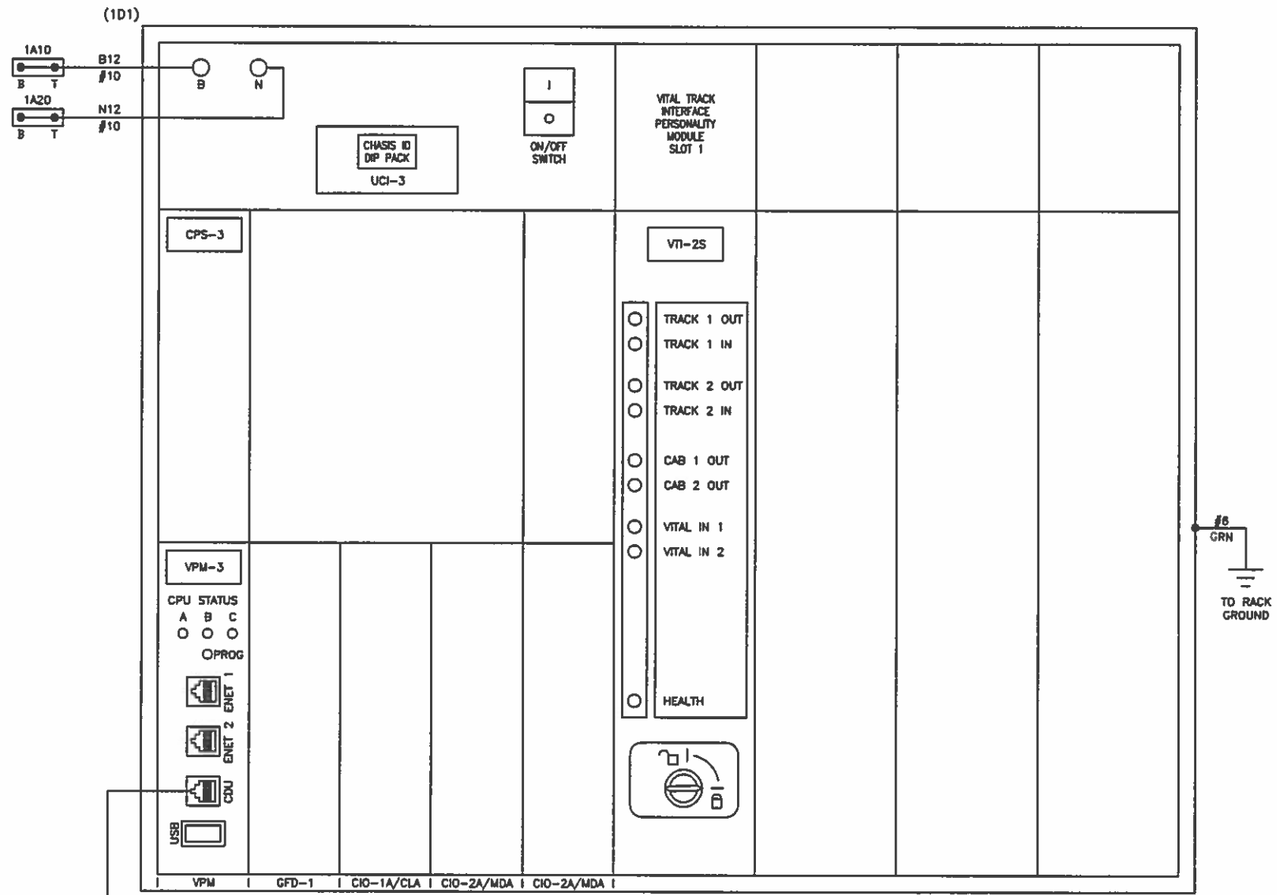

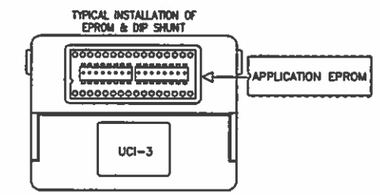

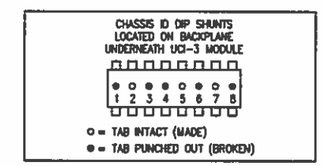

VITAL SELECTION ID-N/A

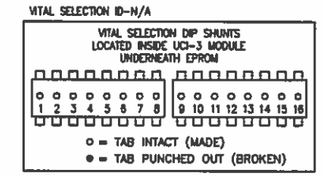

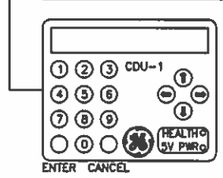

APPLICATION SOFTWARE INFORMATION	
NAME	
REV.	
CHECKSUM	
CRC	

NOTES:

CDU-1 = CONTROL DISPLAY UNIT
CPS-3 = CENTRAL POWER SUPPLY
VPM-3 = VITAL PERIPHERAL MASTER MODULE
UCI-3 = CHASSIS INFORMATION MODULE
VTI-2S = VITAL TRACK INTERFACE
VLD-R16S = VITAL LAMP DRIVER MODULE
VIO-86S = VITAL INPUTS/OUTPUTS
CIO-CLA = COMMUNICATION INPUT/OUTPUT CURRENT LOOP ADAPTER

REV	DATE	DESCRIPTION
1	03/11/15	AS DESIGNED

GETS
Global Signaling

Designed By: BPC
Drawn By: BPC
Checked By: BDW
Approved By: AEB

TTCI

TTT HOUSE T-4

ELECTROLOGIXS 4-SLOT
HARDWARE CONFIGURATION

Scale: NTS
CADD File Name: T4007.DWG
Submitted Date: 03/11/15
Sheet No. 007

SYSTEM CONFIGURATION				
DATE/TIME	SETTING MADE WHEN USING PTC CONFIGURATION			
DIAGNOSTIC PORT				
ETHERNET CONFIG.				
OFFICE CONFIG	NA			
LCP CONFIG	ENABLED	TRUE		
VITAL REMOTE CONFIG	LOCAL PORT	REMOTE PORT	REMOTE PORT CONFIG	
	ETHERNET PORT 1 192.168.40.74	NA	NA	NA
	ETHERNET PORT 2 192.168.1.12	NA	NA	NA
	SERIAL PORT 2	NA		
	SERIAL PORT 3	NA		
TRACK CONFIG	SLOT	TRACK	CONFIGURATION	
	SLOT 1: 4T_TI1	1	TRANSMITTER	4V
			RECEIVER	0.5A
			CODE 5 TYPE	ALT 5
	SLOT 1: 5T_TI1	2	TRANSMITTER	4V
			RECEIVER	0.5A
			CODE 5 TYPE	ALT 5

NOTES:
1. FINAL VITAL CONFIGURATION SETTINGS ARE SUBJECT TO CHANGE IN ACCORDANCE WITH SOFTWARE UPGRADES. FINAL VITAL CONFIGURATION SETTINGS TO BE UPDATED ON AS-IN-SERVICE.

REV	DATE	DESCRIPTION
1	03/11/15	AS DESIGNED

GETS
Global Signaling

Designed By: BPC
Drawn By: BPC
Checked By: BDW
Approved By: AEB

TTCI

TTT HOUSE T-4

ELECTROLOGIXS 4-SLOT CONFIGURATION SETTINGS

Scale: NTS
CADD File Name: T4008.DWG
Submitted Date: 03/11/15
Sheet No. 008

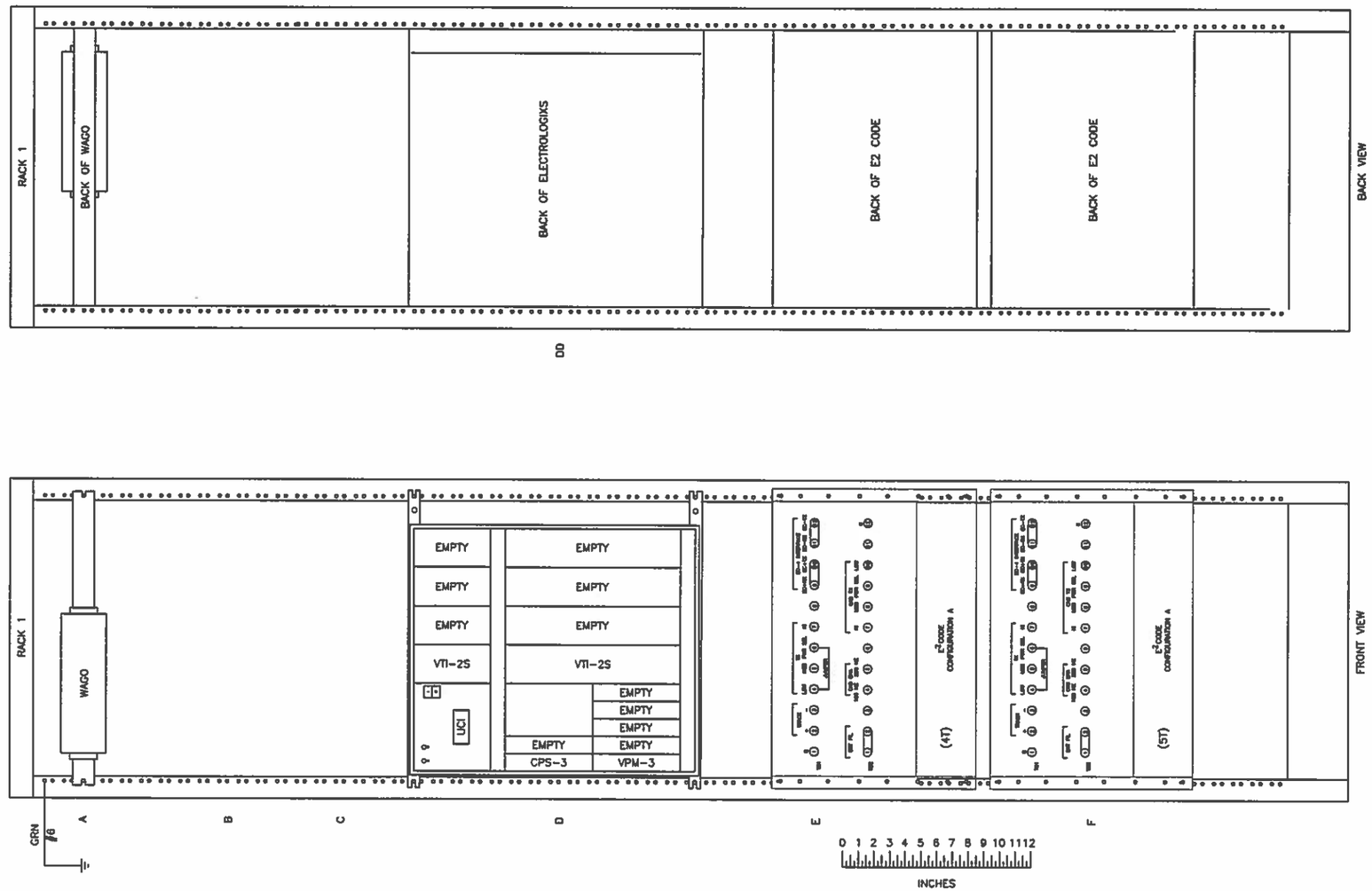

REV	DATE	DESCRIPTION
1	03/11/15	AS DESIGNED

GETS
Global Signaling

Designed By:	BPC
Drawn By:	BPC
Checked By:	BDW
Approved By:	AEB

TTCI

TTT HOUSE T-4

RACK 1 LAYOUT

Scale:	NTS
CADD File Name:	T4009.DWG
Submitted Date:	03/11/15
Sheet No.	009

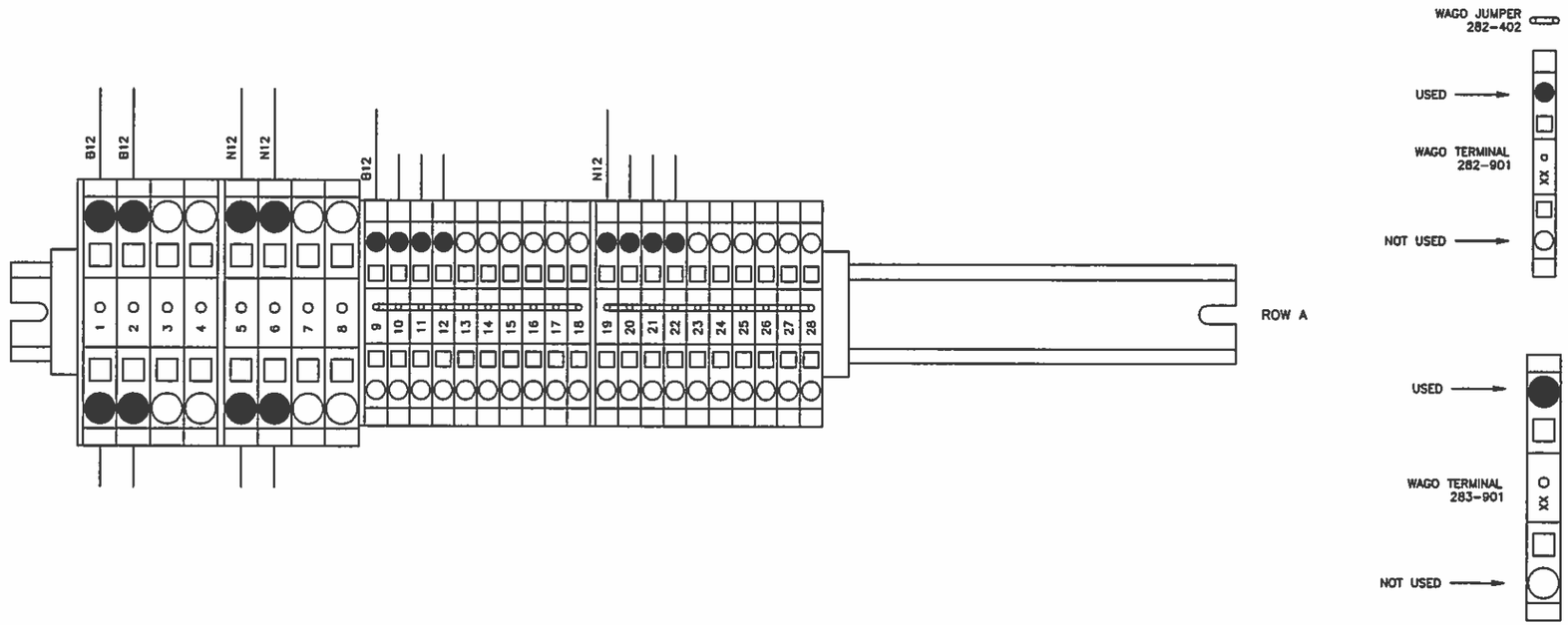

REV	DATE	DESCRIPTION
1	03/11/15	AS DESIGNED

GETS
Global Signaling

Designed By:	BPC
Drawn By:	BPC
Checked By:	BDW
Approved By:	AEB

TTCI

TTT HOUSE T-4

WAGO & RELAY LAYOUT
RACK 1, ROW A & B

Scale:	NTS
CADD File Name:	T4010.DWG
Submitted Date:	03/11/15
Sheet No.	010

HOUSE T-5

REV	DATE	DESCRIPTION
1	03/11/15	AS DESIGNED

GETS
Global Signaling

Designed By:	BPC
Drawn By:	BPC
Checked By:	BDW
Approved By:	AEB

TTCI

TTT HOUSE T-5

COVER SHEET

Scale:	NTS
CADD File Name:	T5000.DWG
Submitted Date:	03/11/15
Sheet No.	000

INDEX OF DRAWINGS			
SHT. NO.	DWG. NO.	REV.	DESCRIPTION
000	T5000.DWG	1	COVER SHEET
001	T5001.DWG	1	INDEX
002	T5002.DWG	1	TRACK & SIGNAL PLAN
003	T5003.DWG	1	CODE & ASPECT CHART
004	T5004.DWG	1	TRACK CIRCUITS
005	T5005.DWG	1	POWER DISTRIBUTION CIRCUITS
006	T5006.DWG	1	ELECTROLOGIXS 4-SLOT MODULE CONNECTOR USAGE
007	T5007.DWG	1	ELECTROLOGIXS 4-SLOT HARDWARE CONFIGURATION
008	T5008.DWG	1	ELECTROLOGIXS 4-SLOT CONFIGURATION SETTINGS
009	T5009.DWG	1	RACK 1 LAYOUT
010	T5010.DWG	1	WAGO & RELAY LAYOUT RACK 1, ROW A & B

REV	DATE	DESCRIPTION
1	03/11/15	AS DESIGNED

GETS
Global Signaling

Designed By: BPC
Drawn By: BPC
Checked By: BDW
Approved By: AEB

TTCI

TTT HOUSE T-5

INDEX

Scale: NTS
CADD File Name: T5001.DWG
Submitted Date: 03/11/15
Sheet No. 001

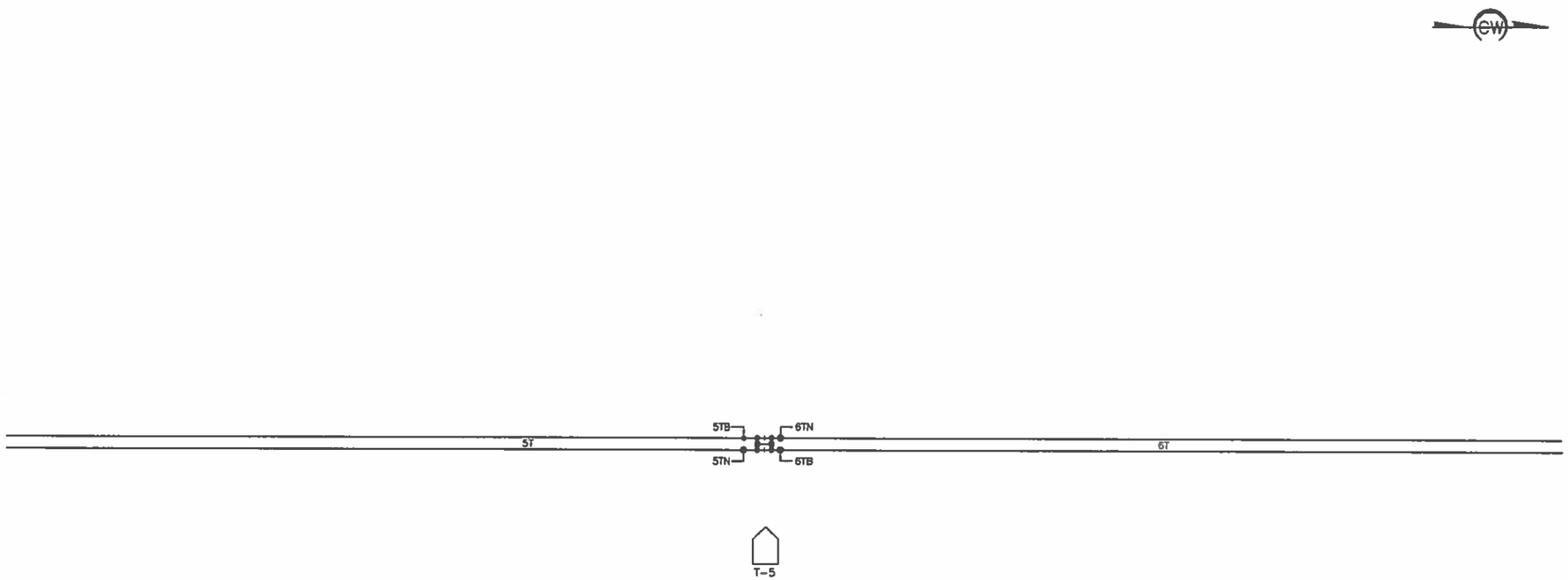

REV	DATE	DESCRIPTION
1	03/11/15	AS DESIGNED

GETS
Global Signaling

Designed By:	BPC
Drawn By:	BPC
Checked By:	BDW
Approved By:	AEB

TTCI

TTT HOUSE T-5

TRACK & SIGNAL PLAN

Scale:	NTS
CADD File Name:	T5002.DWG
Submitted Date:	03/11/15
Sheet No.	002

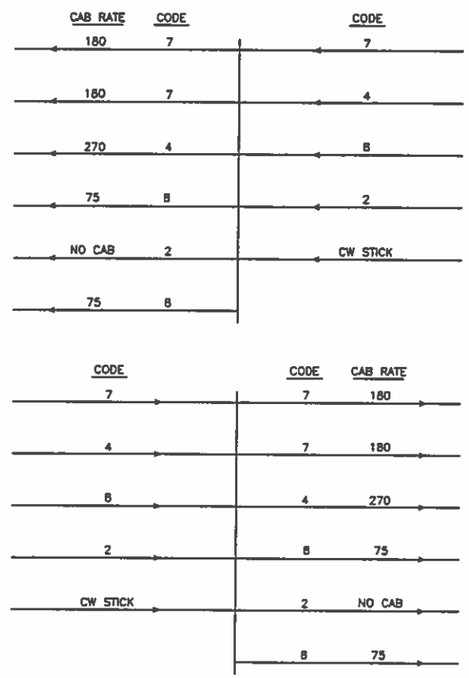

TTT CAB RATE TABLE		
NAME	DESIGNATOR	RATE
CLEAR	C	180
CAB SPEED	CS	270
APPROACH LIMITED	AL7	120
APPROACH	A	75
RESTRICTING	R	NO CAB

REV	DATE	DESCRIPTION
1	03/11/15	AS DESIGNED

GETS
Global Signaling

Designed By: BPC
Drawn By: BPC
Checked By: BDW
Approved By: AEB

TTCI

TTT HOUSE T-5

CODE & ASPECT CHART

Scale: NTS
CADD File Name: T5003.DWG
Submitted Date: 03/11/15
Sheet No. 003

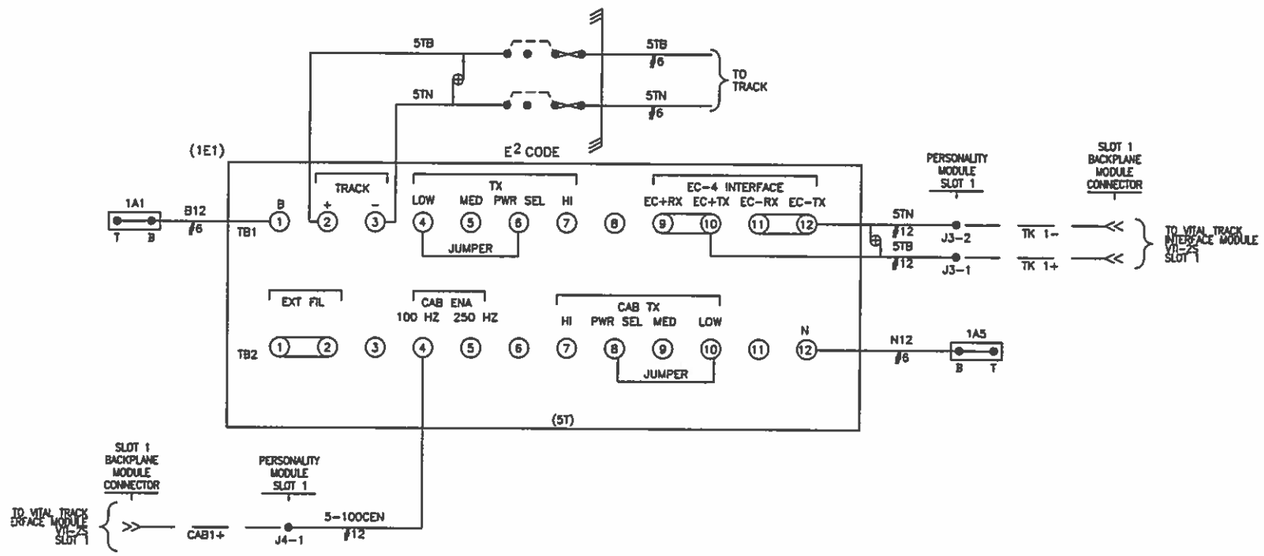

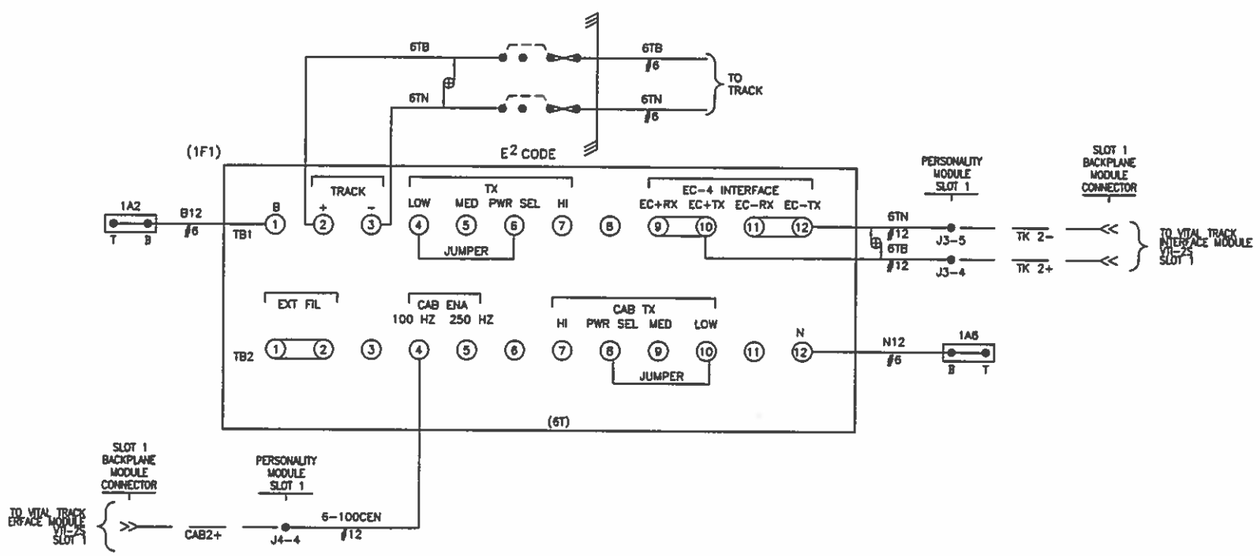

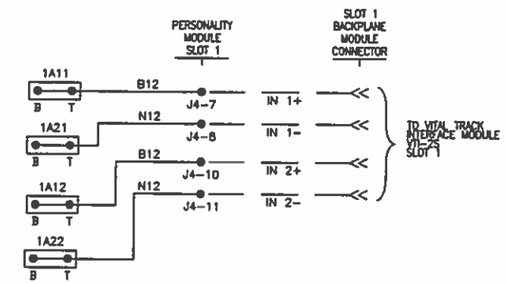

NOTES:

1) ALL WIRING ON THIS SHEET TO BE #10 AWG UNLESS OTHERWISE NOTED.
2) ⊕ = TWISTED PAIR 2 TURNS PER FOOT.
3) ---- = INTERNAL CONNECTION

REV	DATE	DESCRIPTION
1	03/11/15	AS DESIGNED

GETS Global Signaling

Designed By:	BPC
Drawn By:	BPC
Checked By:	BDW
Approved By:	AEB

TTCI

TTT HOUSE T-5

TRACK CIRCUITS

Scale:	NTS
CADD File Name:	T5004.DWG
Submitted Date:	03/11/15
Sheet No.	004

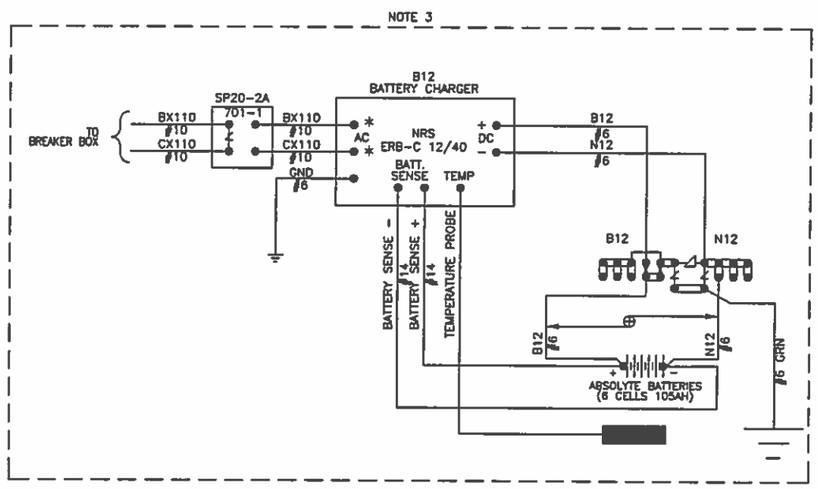

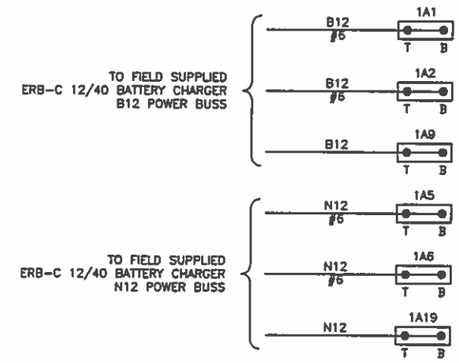

NOTES:

1) ALL SIGNAL WIRING ON THIS SHEET TO BE #10 AWG UNLESS OTHERWISE NOTED.
2) ⊕ = TWISTED PAIR 2 TURNS PER FOOT.
3) FIELD SUPPLIED

REV	DATE	DESCRIPTION
1	03/11/15	AS DESIGNED

GETS
Global Signaling

Designed By:	BPC
Drawn By:	BPC
Checked By:	BDW
Approved By:	AEB

TTCI

TTT HOUSE T-5

POWER DISTRIBUTION CIRCUITS

Scale:	NTS
CADD File Name:	T5005.DWG
Submitted Date:	03/11/15
Sheet No.	005

VR-25
PERSONALITY
MODULE
(SLOT 1)

TK 1+	5TB	X	1
TK 1−	5TN	X	2
			3
TK 2+	6TB	X	4
TK 2−	6TN	X	5
			6
			7

J3

CAB1+	5−100CEN	X	1
CAB1−			2
			3
CAB2+	6−100CEN	X	4
CAB2−			5
			6
IN 1+	B12	X	7
IN 1−	N12	X	8
			9
IN 2+	B12	X	10
IN 2−	N12	X	11

J4

PERSONALITY MODULE
LEGEND

TERMINAL LABEL → XXX | XXXX | X | ← PIN NUMBER

APPLICATION DESCRIPTION

WIRE PRESENT

REV	DATE	DESCRIPTION
1	03/06/15	AS DESIGNED

GETS
Global Signaling

Designed By: BPC
Drawn By: BPC
Checked By: BDW
Approved By: AEB

TTCI

TTT HOUSE T−5

ELECTROLOGIXS 4−SLOT
MODULE CONNECTOR USAGE

Scale: NTS
CADD File Name: T5006.DWG
Submitted Date: 03/11/15
Sheet No. 006

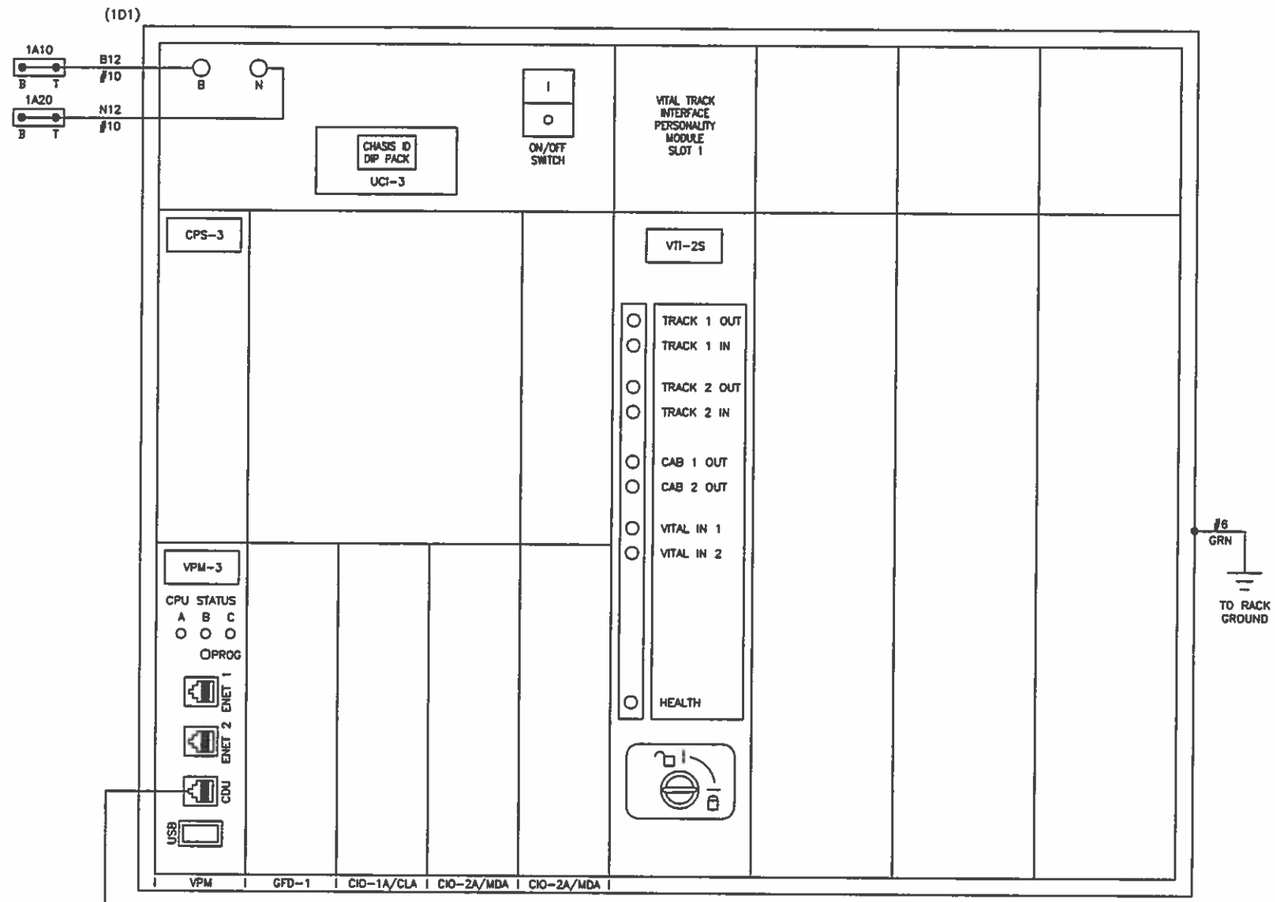

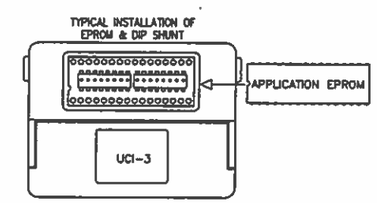

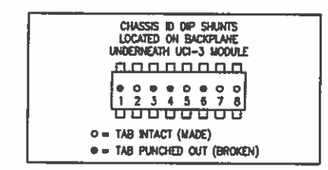

VITAL SELECTION ID-N/A

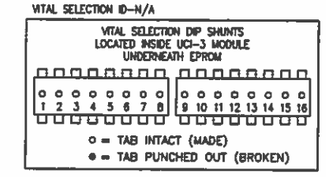

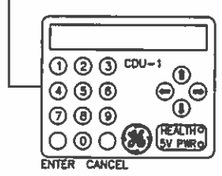

APPLICATION SOFTWARE INFORMATION	
NAME	
REV.	
CHECKSUM	
CRC	

NOTES:

CDU-1 = CONTROL DISPLAY UNIT
CPS-3 = CENTRAL POWER SUPPLY
VPM-3 = VITAL PERIPHERAL MASTER MODULE
UCI-3 = CHASSIS INFORMATION MODULE
VTI-2S = VITAL TRACK INTERFACE
VLD-R16S = VITAL LAMP DRIVER MODULE
VIO-86S = VITAL INPUTS/OUTPUTS
CIO-CLA = COMMUNICATION INPUT/OUTPUT CURRENT LOOP ADAPTER

REV	DATE	DESCRIPTION
1	03/11/15	AS DESIGNED

GETS
Global Signaling

Designed By:	BPC
Drawn By:	BPC
Checked By:	BDW
Approved By:	AEB

TTCI

TTT HOUSE T-5

ELECTROLOGIXS 4-SLOT
HARDWARE CONFIGURATION

Scale:	NTS
CADD File Name:	T5007.DWG
Submitted Date:	03/11/15
Sheet No.	007

SYSTEM CONFIGURATION				
DATE/TIME	SETTING MADE WHEN USING PTC CONFIGURATION			
DIAGNOSTIC PORT				
ETHERNET CONFIG.				
OFFICE CONFIG	NA			
LCP CONFIG	ENABLED	TRUE		
VITAL REMOTE CONFIG	LOCAL PORT	REMOTE PORT	REMOTE PORT CONFIG	
	ETHERNET PORT 1 192.168.40.75	NA	NA	NA
	ETHERNET PORT 2 192.168.1.12	NA	NA	NA
	SERIAL PORT 2	NA		
	SERIAL PORT 3	NA		
TRACK CONFIG	SLOT	TRACK	CONFIGURATION	
	SLOT 1: 5T_TI1	1	TRANSMITTER	4V
			RECEIVER	0.5A
			CODE 5 TYPE	ALT 5
	SLOT 1: 6T_TI1	2	TRANSMITTER	4V
			RECEIVER	0.5A
			CODE 5 TYPE	ALT 5

NOTES:
1. FINAL VITAL CONFIGURATION SETTINGS ARE SUBJECT TO CHANGE IN ACCORDANCE WITH SOFTWARE UPGRADES. FINAL VITAL CONFIGURATION SETTINGS TO BE UPDATED ON AS-IN-SERVICE.

REV	DATE	DESCRIPTION
1	03/11/15	AS DESIGNED

GETS
Global Signaling

Designed By: BPC
Drawn By: BPC
Checked By: BDW
Approved By: AEB

TTCI

TTT HOUSE T-5

ELECTROLOGIXS 4-SLOT CONFIGURATION SETTINGS

Scale: NTS
CADD File Name: T5008.DWG
Submitted Date: 03/11/15
Sheet No. 008

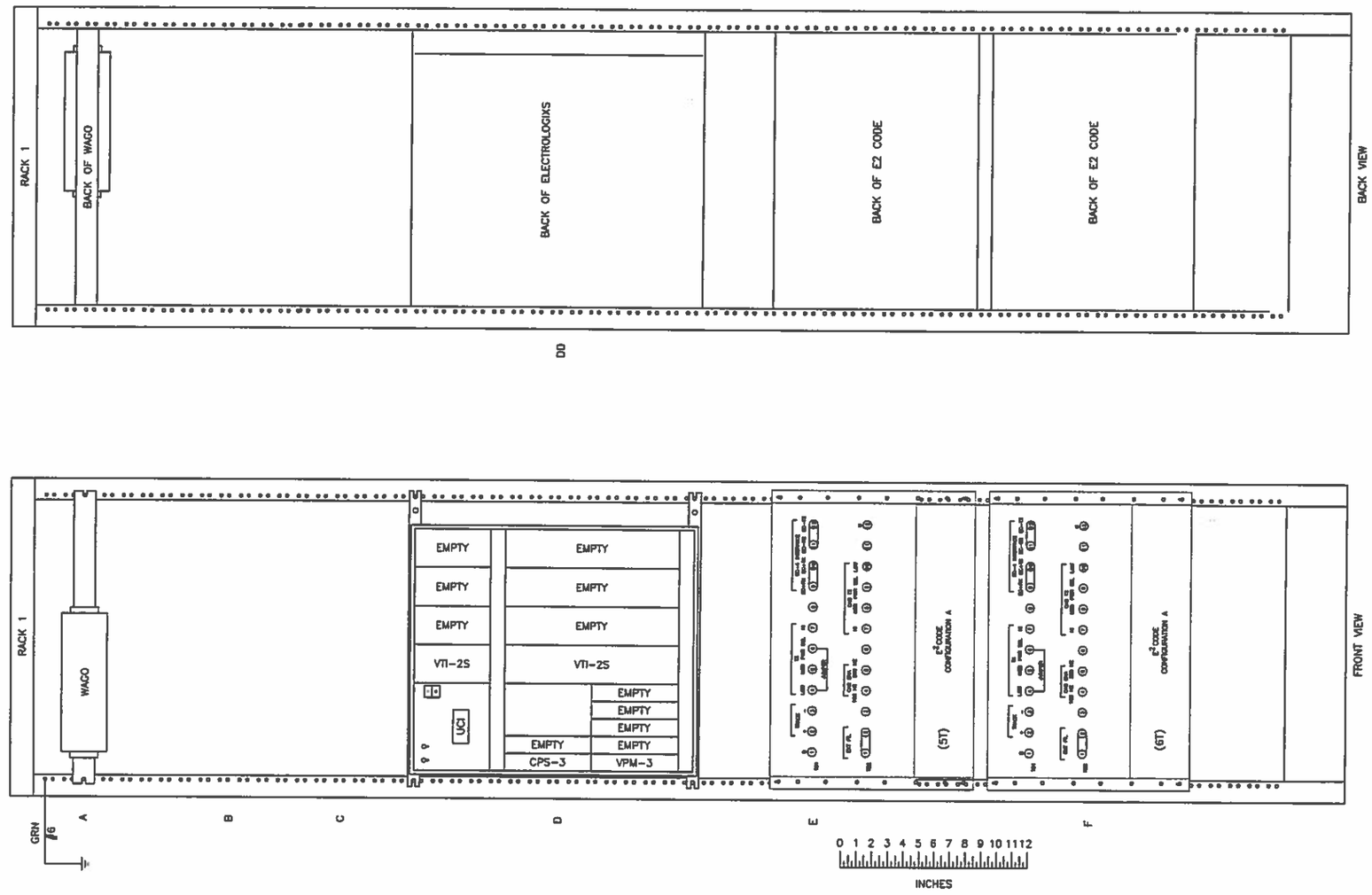

REV	DATE	DESCRIPTION
1	03/11/15	AS DESIGNED

GETS
Global Signaling

Designed By:	BPC
Drawn By:	BPC
Checked By:	BDW
Approved By:	AEB

TTCI

TTT HOUSE T-5

RACK 1 LAYOUT

Scale:	NTS
CADD File Name:	T5009.DWG
Submitted Date:	03/11/15
Sheet No.	009

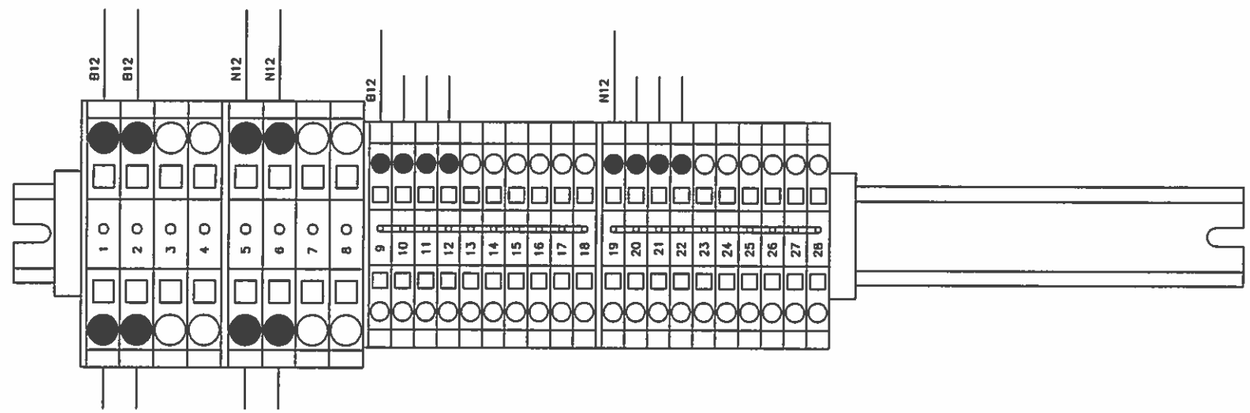

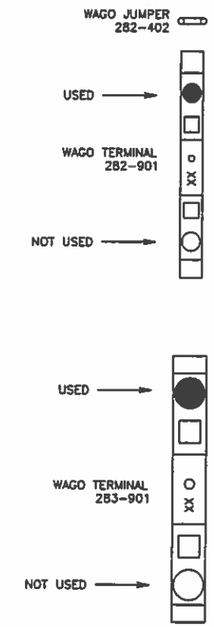

REV	DATE	DESCRIPTION
1	03/11/15	AS DESIGNED

GETS
Global Signaling

Designed By:	BPC
Drawn By:	BPC
Checked By:	BDW
Approved By:	AEB

TTCI

TTT HOUSE T-5

WAGO & RELAY LAYOUT
RACK 1, ROW A & B

Scale:	NTS
CADD File Name:	T5010.DWG
Submitted Date:	03/11/15
Sheet No.	010

HOUSE T-R

REV	DATE	DESCRIPTION
1	03/11/15	AS DESIGNED

GETS
Global Signaling

Designed By:	BPC
Drawn By:	BPC
Checked By:	BDW
Approved By:	AEB

TTCI

TTT HOUSE T-R

COVER SHEET

Scale:	NTS
CADD File Name:	TR000.DWG
Submitted Date:	03/11/15
Sheet No.	000

INDEX OF DRAWINGS			
SHT. NO.	DWG. NO.	REV.	DESCRIPTION
000	TR000.DWG	1	COVER SHEET
001	TR001.DWG	1	INDEX
002	TR002.DWG	1	TRACK & SIGNAL PLAN
003	TR003.DWG	1	CODE & ASPECT CHART
004	TR004.DWG	1	TRACK CIRCUITS
005	TR005.DWG	1	POWER DISTRIBUTION CIRCUITS
006	TR006.DWG	1	ELECTROLOGIXS 4-SLOT MODULE CONNECTOR USAGE
007	TR007.DWG	1	ELECTROLOGIXS 4-SLOT HARDWARE CONFIGURATION
008	TR008.DWG	1	ELECTROLOGIXS 4-SLOT CONFIGURATION SETTINGS
009	TR009.DWG	1	RACK 1 LAYOUT
010	TR010.DWG	1	WAGO & RELAY LAYOUT RACK 1, ROW A & B

REV	DATE	DESCRIPTION
1	03/11/15	AS DESIGNED

GETS
Global Signaling

Designed By: BPC
Drawn By: BPC
Checked By: BDW
Approved By: AEB

TTCI

TTT HOUSE T-R

INDEX

Scale: NTS
CADD File Name: TR001.DWG
Submitted Date: 03/11/15
Sheet No. 001

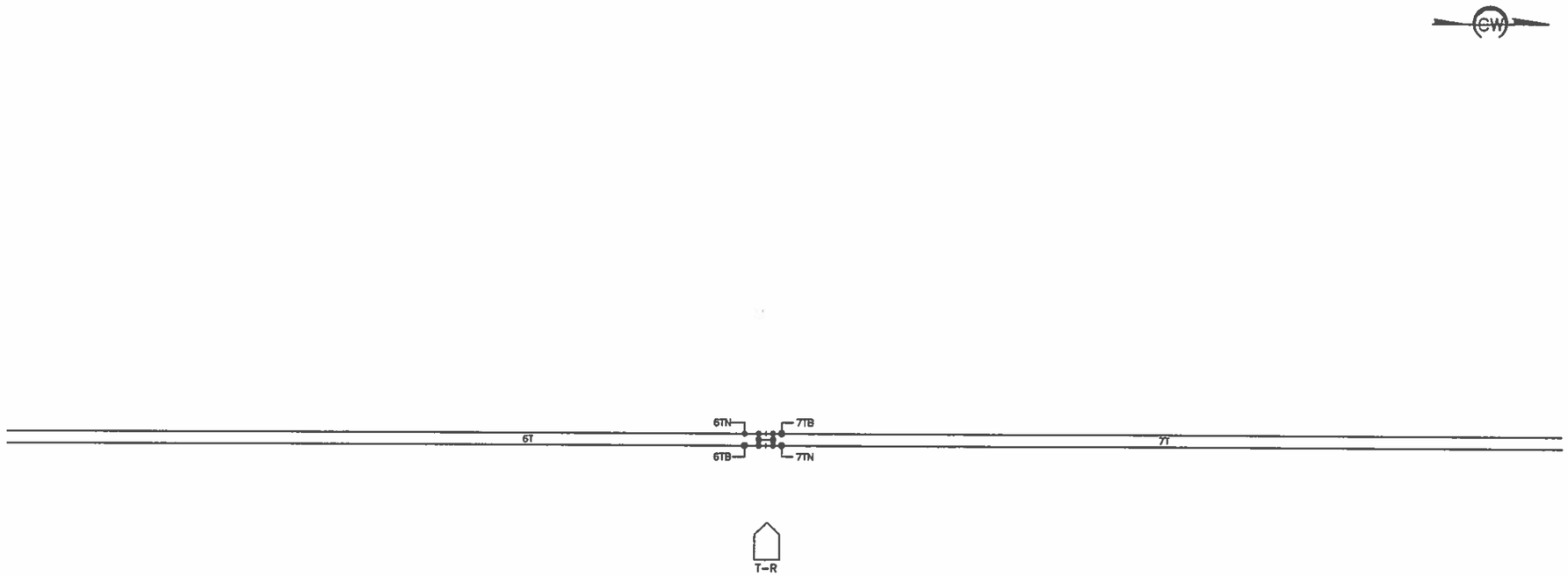

REV	DATE	DESCRIPTION
1	03/11/15	AS DESIGNED

GETS
Global Signaling

Designed By:	BPC
Drawn By:	BPC
Checked By:	BDW
Approved By:	AEB

TTCI

TTT HOUSE T-R

TRACK & SIGNAL PLAN

Scale:	NTS
CADD File Name:	TR002.DWG
Submitted Date:	03/11/15
Sheet No.	002

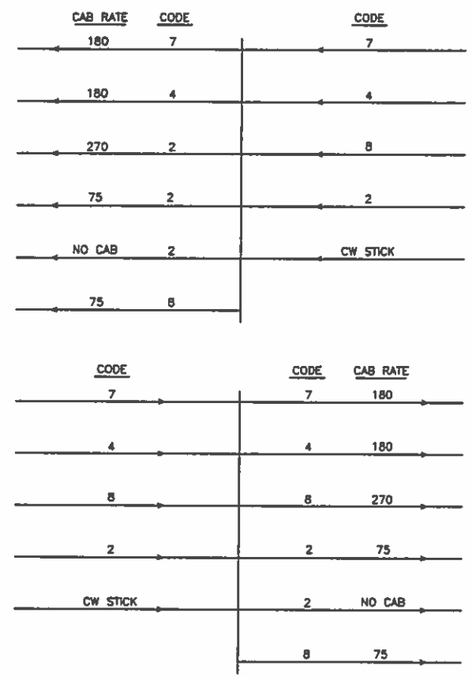

TTT CAB RATE TABLE		
NAME	DESIGNATOR	RATE
CLEAR	C	180
CAB SPEED	CS	270
APPROACH LIMITED	AL?	120
APPROACH	A	75
RESTRICTING	R	NO CAB

REV	DATE	DESCRIPTION
1	03/11/15	AS DESIGNED

GETS
Global Signaling

Designed By: BPC
Drawn By: BPC
Checked By: BDW
Approved By: AEB

TTCI

TTT HOUSE T-R

CODE & ASPECT CHART

Scale: NTS
CADD File Name: TR003.DWG
Submitted Date: 03/11/15
Sheet No. 003

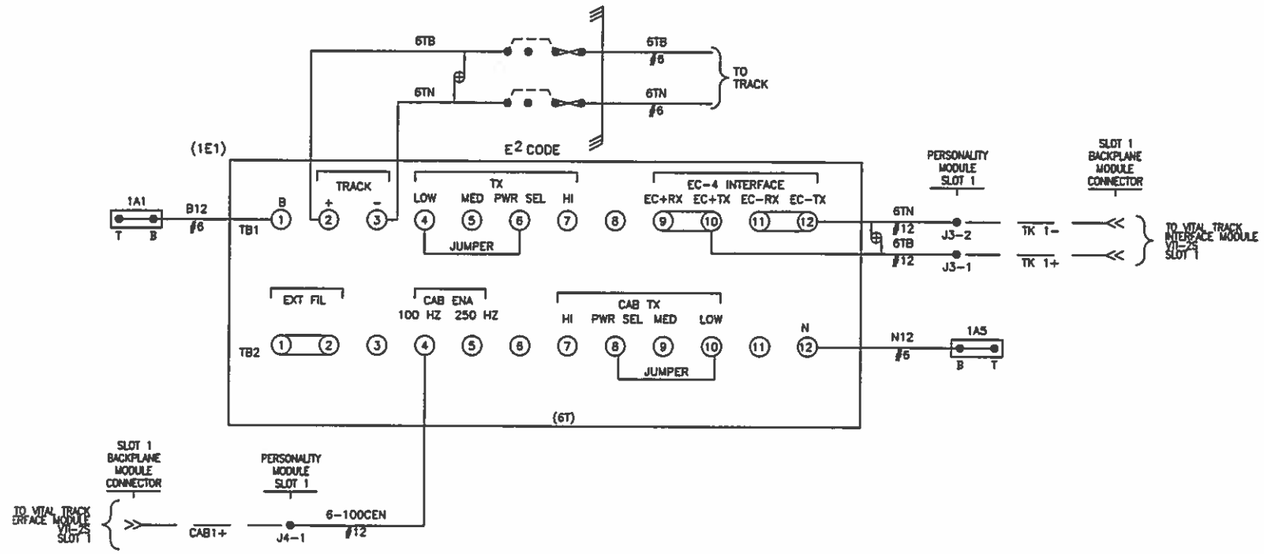

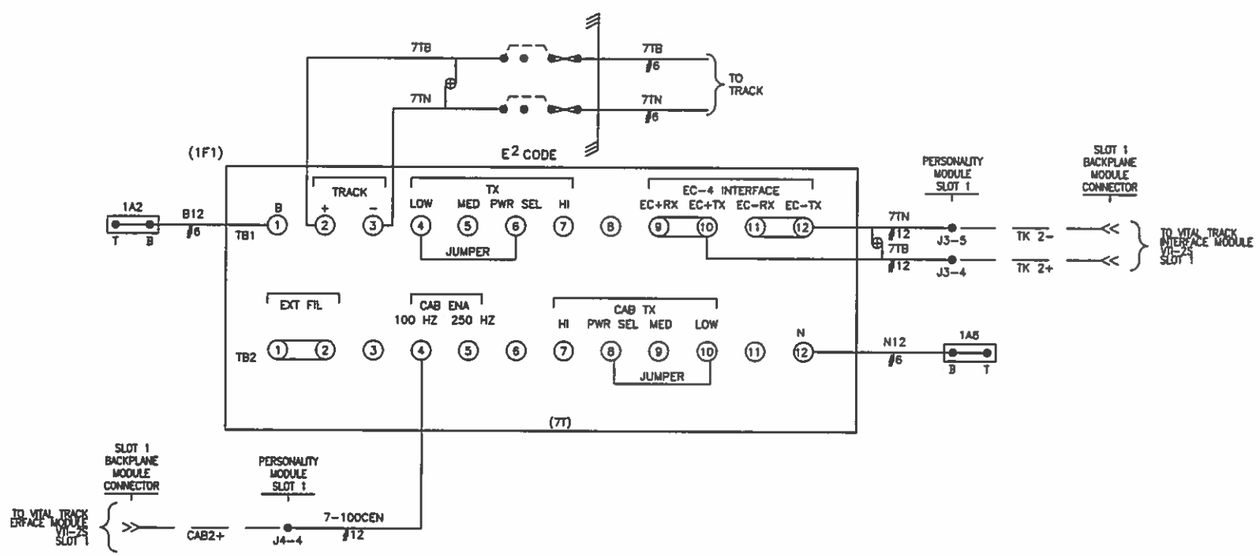

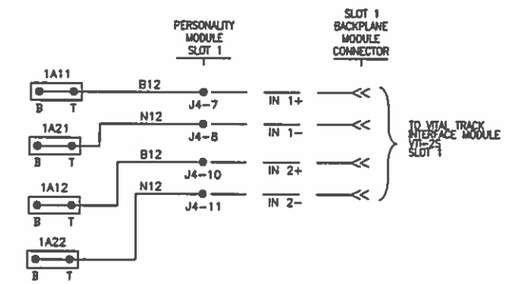

NOTES:

1) ALL WIRING ON THIS SHEET TO BE #10 AWG UNLESS OTHERWISE NOTED.
2) ⊕ = TWISTED PAIR 2 TURNS PER FOOT.
3) ---- = INTERNAL CONNECTION

REV	DATE	DESCRIPTION
1	03/11/15	AS DESIGNED

GETS
Global Signaling

Designed By:	BPC
Drawn By:	BPC
Checked By:	BDW
Approved By:	AEB

TTCI

TTT HOUSE T-R

TRACK CIRCUITS

Scale:	NTS
CADD File Name:	TR004.DWG
Submitted Date:	03/11/15
Sheet No.	004

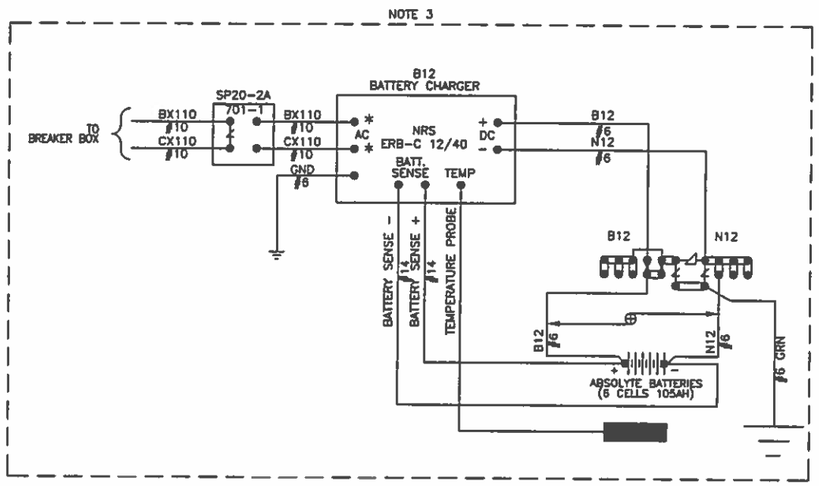

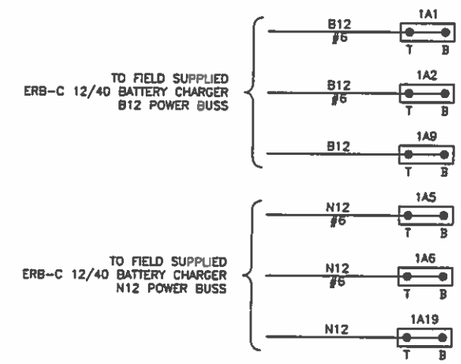

NOTES:

1) ALL SIGNAL WIRING ON THIS SHEET TO BE #10 AWG UNLESS OTHERWISE NOTED.
2) TWISTED PAIR 2 TURNS PER FOOT.
3) FIELD SUPPLIED

REV	DATE	DESCRIPTION
1	03/11/15	AS DESIGNED

GETS Global Signaling

Designed By:	BPC
Drawn By:	BPC
Checked By:	BDW
Approved By:	AEB

TTCI

TTT HOUSE T-R

POWER DISTRIBUTION CIRCUITS

Scale:	NTS
CADD File Name:	TR005.DWG
Submitted Date:	03/11/15
Sheet No.	005

VTI-2S
PERSONALITY
MODULE
(SLOT 1)

TK 1+	6TB	X	1
TK 1−	6TN	X	2
			3
TK 2+	7TB	X	4
TK 2−	7TN	X	5
			6
			7

J3

CAB1+	6-100CEN	X	1
CAB1−			2
			3
CAB2+	7-100CEN	X	4
CAB2−			5
			6
IN 1+	B12	X	7
IN 1−	N12	X	8
			9
IN 2+	B12	X	10
IN 2−	N12	X	11

J4

PERSONALITY MODULE
LEGEND

TERMINAL LABEL → XXX | XXXX | X | X ← PIN NUMBER

APPLICATION DESCRIPTION

WIRE PRESENT

REV	DATE	DESCRIPTION
1	03/06/15	AS DESIGNED

GETS
Global Signaling

Designed By: BPC
Drawn By: BPC
Checked By: BDW
Approved By: AEB

TTCI

TTT HOUSE T-R

ELECTROLOGIXS 4-SLOT
MODULE CONNECTOR USAGE

Scale: NTS
CADD File Name: TR006.DWG
Submitted Date: 03/11/15
Sheet No. 006

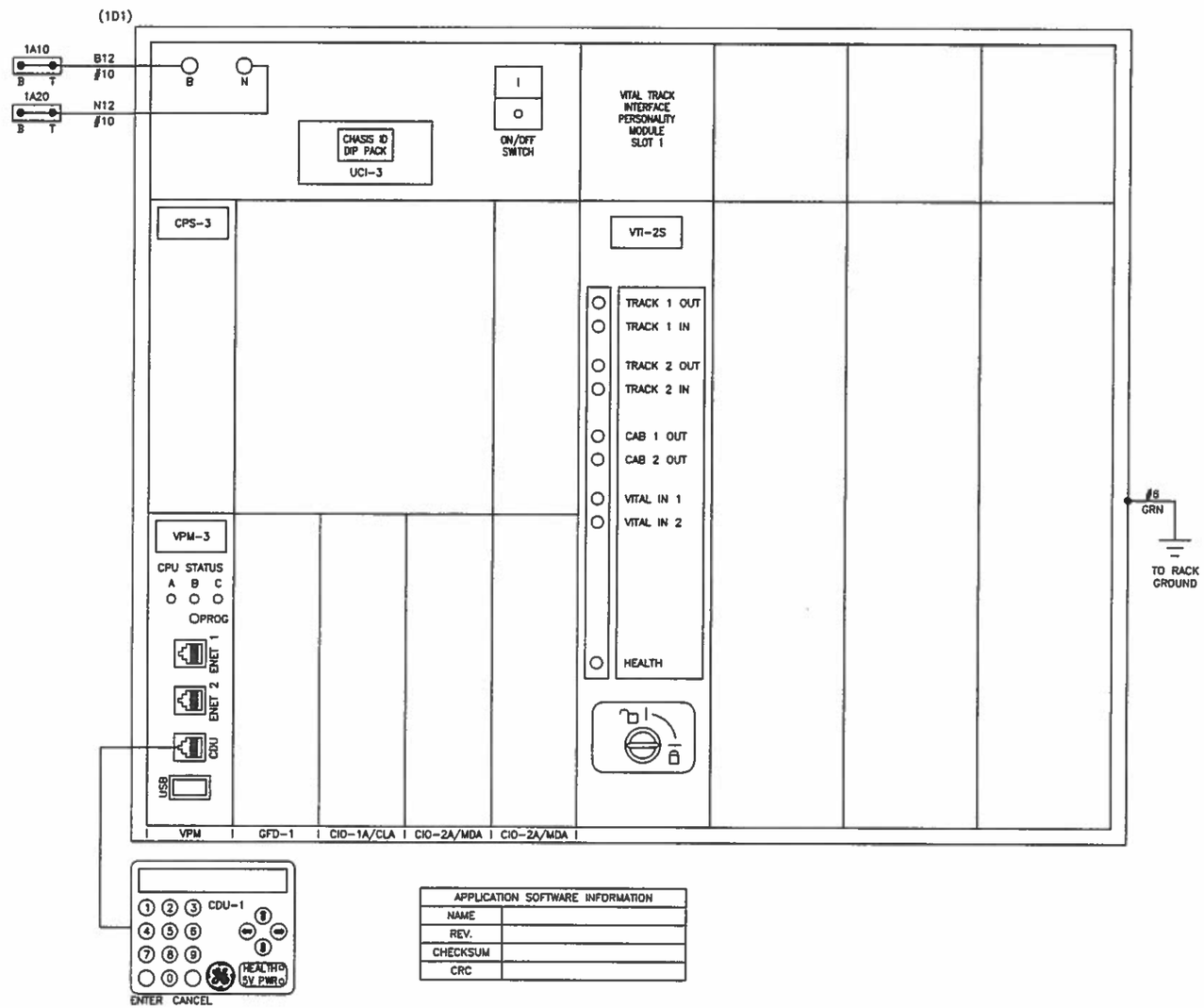

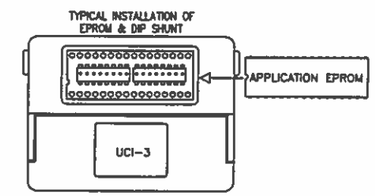

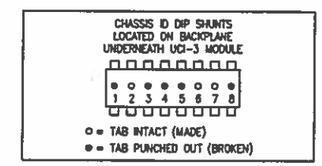

VITAL SELECTION ID-N/A

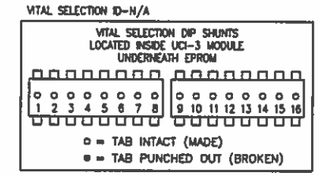

APPLICATION SOFTWARE INFORMATION	
NAME	
REV.	
CHECKSUM	
CRC	

NOTES:

CDU-1 = CONTROL DISPLAY UNIT
CPS-3 = CENTRAL POWER SUPPLY
VPM-3 = VITAL PERIPHERAL MASTER MODULE
UCI-3 = CHASSIS INFORMATION MODULE
VTI-2S = VITAL TRACK INTERFACE
VLD-R16S = VITAL LAMP DRIVER MODULE
VIO-B6S = VITAL INPUTS/OUTPUTS
CIO-CLA = COMMUNICATION INPUT/OUTPUT CURRENT LOOP ADAPTER

REV	DATE	DESCRIPTION
1	03/11/15	AS DESIGNED

GETS
Global Signaling

Designed By:	BPC
Drawn By:	BPC
Checked By:	BDW
Approved By:	AEB

TTCI

TTT HOUSE T-R

ELECTROLOGIXS 4-SLOT
HARDWARE CONFIGURATION

Scale:	NTS
CADD File Name:	TR007.DWG
Submitted Date:	03/11/15
Sheet No.	007

SYSTEM CONFIGURATION				
DATE/TIME	SETTING MADE WHEN USING PTC CONFIGURATION			
DIAGNOSTIC PORT				
ETHERNET CONFIG.				
OFFICE CONFIG	NA			
LCP CONFIG	ENABLED	TRUE		
VITAL REMOTE CONFIG	LOCAL PORT	REMOTE PORT	REMOTE PORT CONFIG	
	ETHERNET PORT 1 192.168.40.70	NA	NA	NA
	ETHERNET PORT 2 192.168.1.12	NA	NA	NA
	SERIAL PORT 2	NA		
	SERIAL PORT 3	NA		
TRACK CONFIG	SLOT	TRACK	CONFIGURATION	
	SLOT 1: 6T_TI1	1	TRANSMITTER	4V
			RECEIVER	0.5A
			CODE 5 TYPE	ALT 5
	SLOT 1: 7T_TI1	2	TRANSMITTER	4V
			RECEIVER	0.5A
			CODE 5 TYPE	ALT 5

NOTES:
1. FINAL VITAL CONFIGURATION SETTINGS ARE SUBJECT TO CHANGE IN ACCORDANCE WITH SOFTWARE UPGRADES. FINAL VITAL CONFIGURATION SETTINGS TO BE UPDATED ON AS-IN-SERVICE.

REV	DATE	DESCRIPTION
1	03/11/15	AS DESIGNED

GETS
Global Signaling

Designed By: BPC
Drawn By: BPC
Checked By: BDW
Approved By: AEB

TTCI

TTT HOUSE T-R

ELECTROLOGIXS 4-SLOT CONFIGURATION SETTINGS

Scale: NTS
CADD File Name: TR008.DWG
Submitted Date: 03/11/15
Sheet No. 008

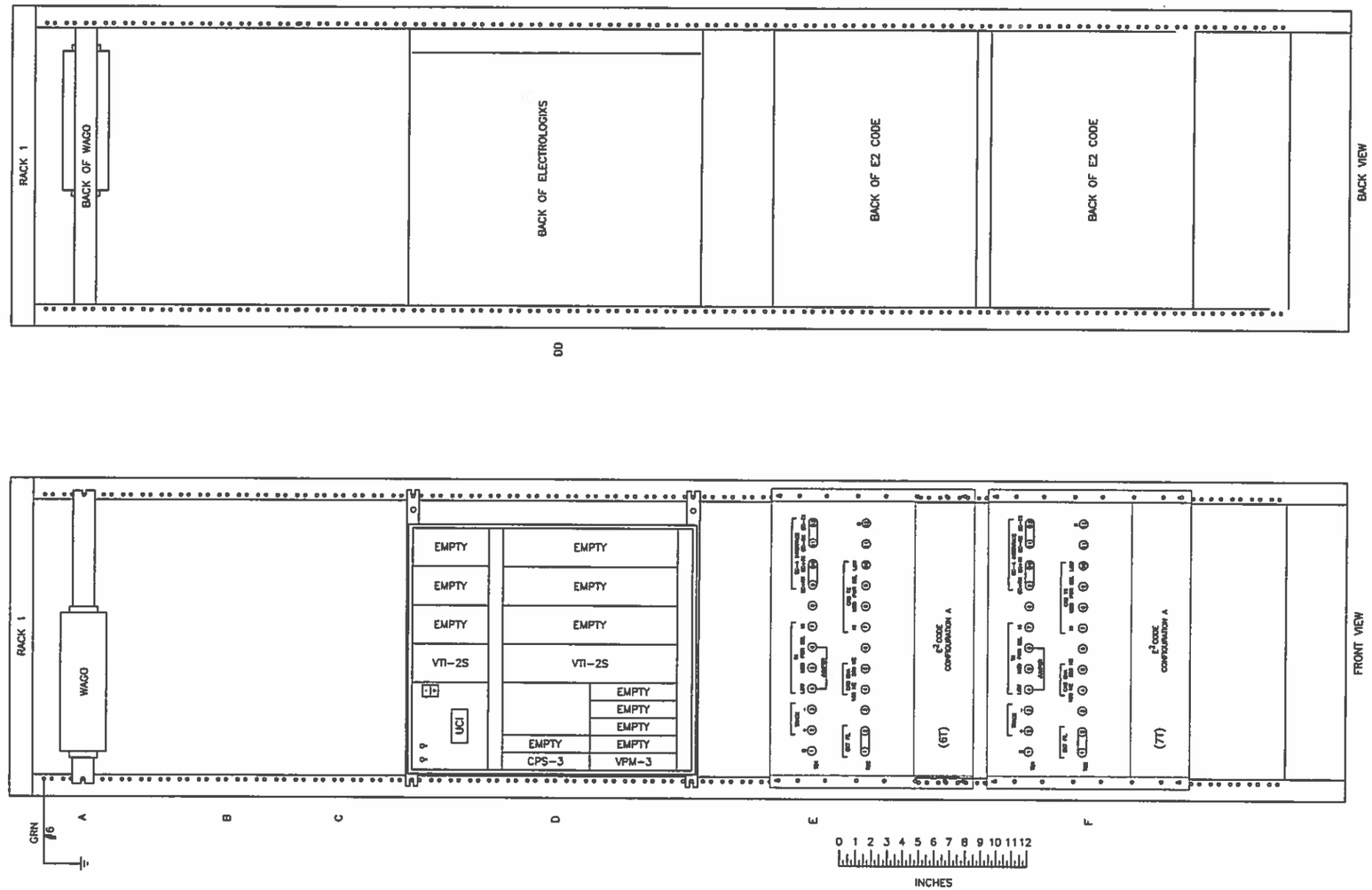

REV	DATE	DESCRIPTION
1	03/11/15	AS DESIGNED

GETS
Global Signaling

Designed By:	BPC
Drawn By:	BPC
Checked By:	BDW
Approved By:	AEB

TTCI

TTT HOUSE T-R

RACK 1 LAYOUT

Scale:	NTS
CADD File Name:	TR009.DWG
Submitted Date:	03/11/15
Sheet No.	009

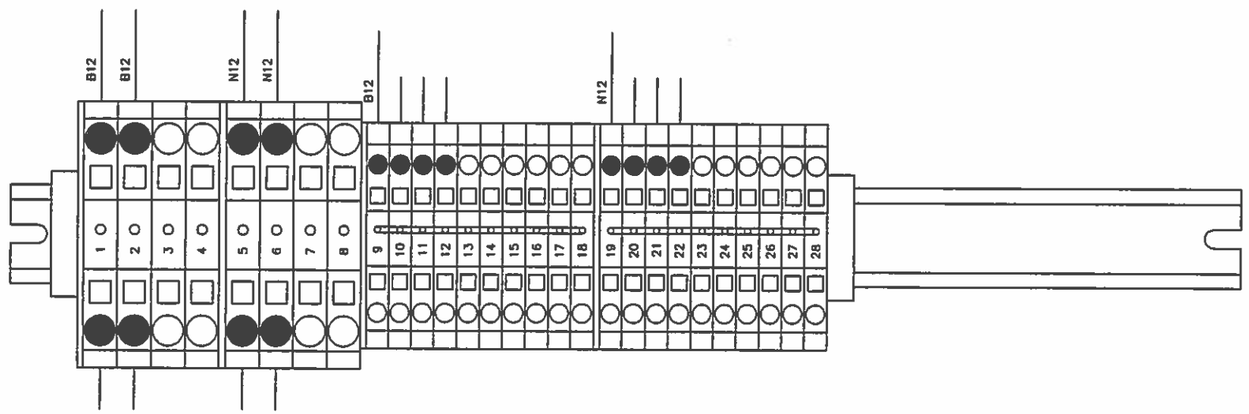

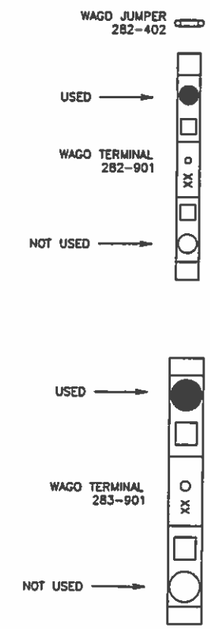

REV	DATE	DESCRIPTION
1	03/11/15	AS DESIGNED

GETS
Global Signaling

Designed By:	BPC
Drawn By:	BPC
Checked By:	BDW
Approved By:	AEB

TTCI

TTT HOUSE T-R

WAGO & RELAY LAYOUT
RACK 1, ROW A & B

Scale:	NTS
CADD File Name:	TR010.DWG
Submitted Date:	03/11/15
Sheet No.	010

HOUSE T-6

REV	DATE	DESCRIPTION
2	03/30/15	UPDATES FROM SITE SURVEY/PLAN REVIEWS
1	03/06/15	AS DESIGNED

GETS
Global Signaling

Designed By:	BPC
Drawn By:	BPC
Checked By:	BDW
Approved By:	AEB

TTCI

TTT HOUSE T-6

COVER SHEET

Scale:	NTS
CADD File Name:	T6000.DWG
Submitted Date:	03/06/15
Sheet No.	000

INDEX OF DRAWINGS			
SHT. NO.	DWG. NO.	REV.	DESCRIPTION
000	T6000.DWG	2	COVER SHEET
001	T6001.DWG	2	INDEX
002	T6002.DWG	2	TRACK & SIGNAL PLAN
003	T6003.DWG	1	CODE & ASPECT CHART
004	T6004.DWG	1	TRACK CIRCUITS
005	T6005.DWG	1	SIGNAL LIGHTING CIRCUITS
006	T6006.DWG	1	COMMUNICATIONS
007	T6007.DWG	1	POWER DISTRIBUTION CIRCUITS
008	T6008.DWG	1	ELECTROLOGIXS 9-SLOT MODULE CONNECTOR USAGE
009	T6009.DWG	1	ELECTROLOGIXS 9-SLOT HARDWARE CONFIGURATION
010	T6010.DWG	1	ELECTROLOGIXS 9-SLOT CONFIGURATION SETTINGS
011	T6011.DWG	1	RACK 1 LAYOUT
012	T6012.DWG	1	WAGO & RELAY LAYOUT RACK 1, ROW A & B
013	T6013.DWG	1	LOCAL CONTROL PANEL
014	T6014.DWG	1	RTT/TTT VITAL REMOTE NETWORKS

REV	DATE	DESCRIPTION
2	03/30/15	UPDATES FROM SITE SURVEY/PLAN REVIEWS
1	03/06/15	AS DESIGNED

GETS
Global Signaling

Designed By: BPC
Drawn By: BPC
Checked By: BDW
Approved By: AEB

TTCI

TTT HOUSE T-6

INDEX

Scale: NTS
CADD File Name: T6001.DWG
Submitted Date: 03/06/15
Sheet No. 001

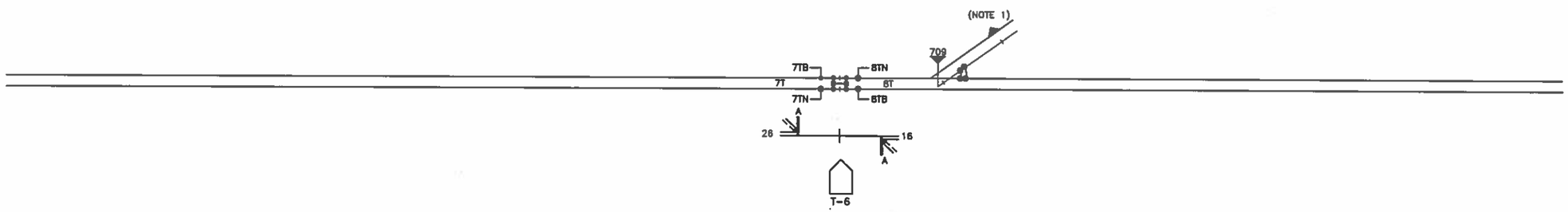

NOTES

1. PERMANENT DERAIL REQUIRED AT FOULING POINT

REV	DATE	DESCRIPTION
2	03/30/15	ADDED INSULATED JOINTS AND JUMPERS TO 709 TURNOUT
1	03/06/15	AS DESIGNED

GETS
Global Signaling

Designed By: BPC
Drawn By: BPC
Checked By:
Approved By:

TTCI

TTT HOUSE T-6

TRACK & SIGNAL PLAN

Scale: NTS
CADD File Name: T6002.DWG
Submitted Date: 03/06/15
Sheet No. 002

CODE ASSIGNMENTS								
CONTROLS								
	BIT 1	BIT 2	BIT 3	BIT 4	BIT 5	BIT 6	BIT 7	BIT 8
BYTE 1	WSGZ	ENGZ	STOP					
INDICATIONS								
	BIT 1	BIT 2	BIT 3	BIT 4	BIT 5	BIT 6	BIT 7	BIT 8
BYTE 1	WSGK	WSTENK	ENGK	ENTENK	CCWK	CWK	7BK	7TK
BYTE 2	6BK	6TK	LOCALK					

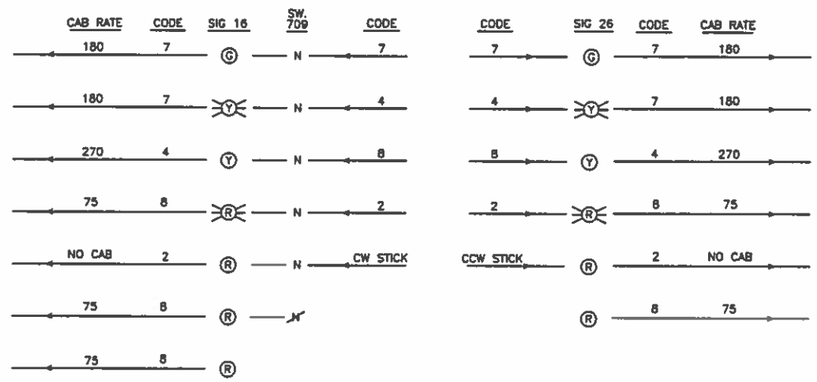

LAMP OUT DOWNGRADES FOR SIG 16				
CODE IN	LAMP OUT	ASPECT	CODE OUT	CAB RATE
7	G	FY	7	180
4,8	Y	FR	8	75
*NO CODE	R	D	8	75
ALL CODES	ALL	D	8	75

LAMP OUT DOWNGRADES FOR SIG 26				
CODE IN	LAMP OUT	ASPECT	CODE OUT	CAB RATE
7	G	FY	7	180
4,8	Y	FR	8	75
*NO CODE	R	D	8	75
ALL CODES	ALL	D	8	75

TTT CAB RATE TABLE		
NAME	DESIGNATOR	RATE
CLEAR	C	180
CAB SPEED	CS	270
APPROACH LIMITED	AL7	120
APPROACH	A	75
RESTRICTING	R	NO CAB

REV	DATE	DESCRIPTION
1	03/06/15	AS DESIGNED

GETS
Global Signaling

Designed By: BPC
Drawn By: BPC
Checked By: BDW
Approved By: AEB

TTCI

TTT HOUSE T-6

CODE & ASPECT CHART

Scale: NTS
CADD File Name: T6003.DWG
Submitted Date: 03/06/15
Sheet No. 003

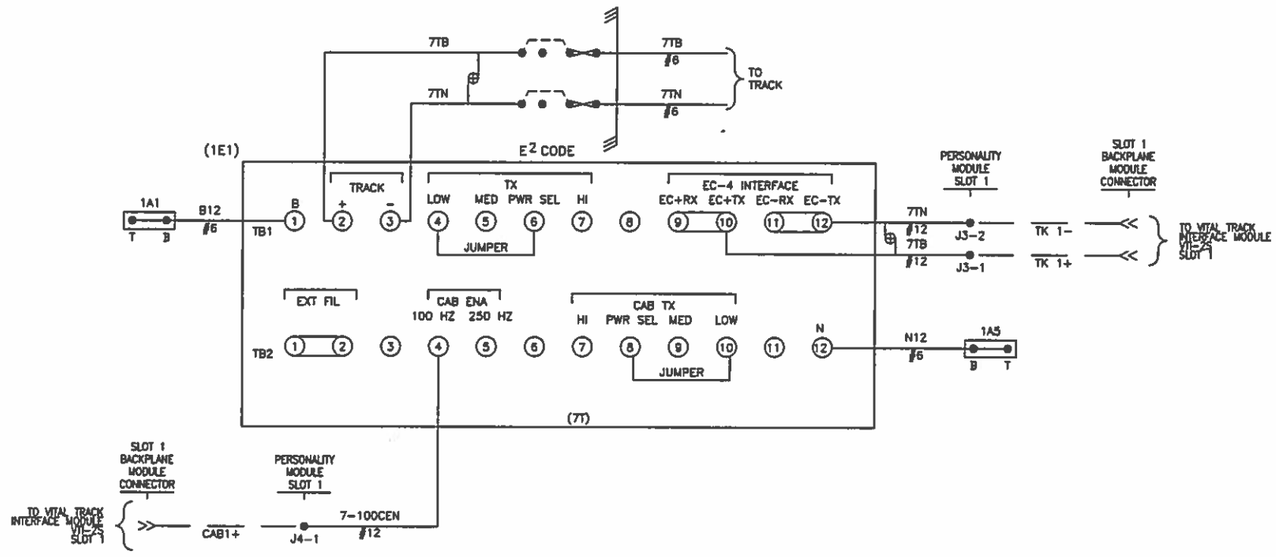

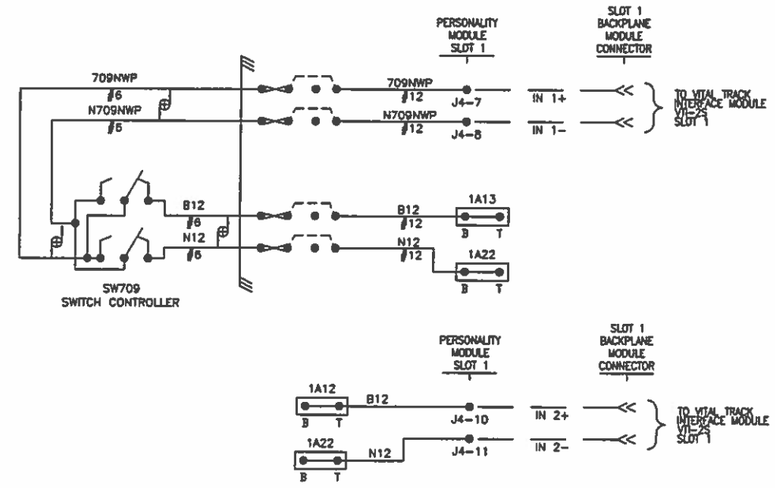

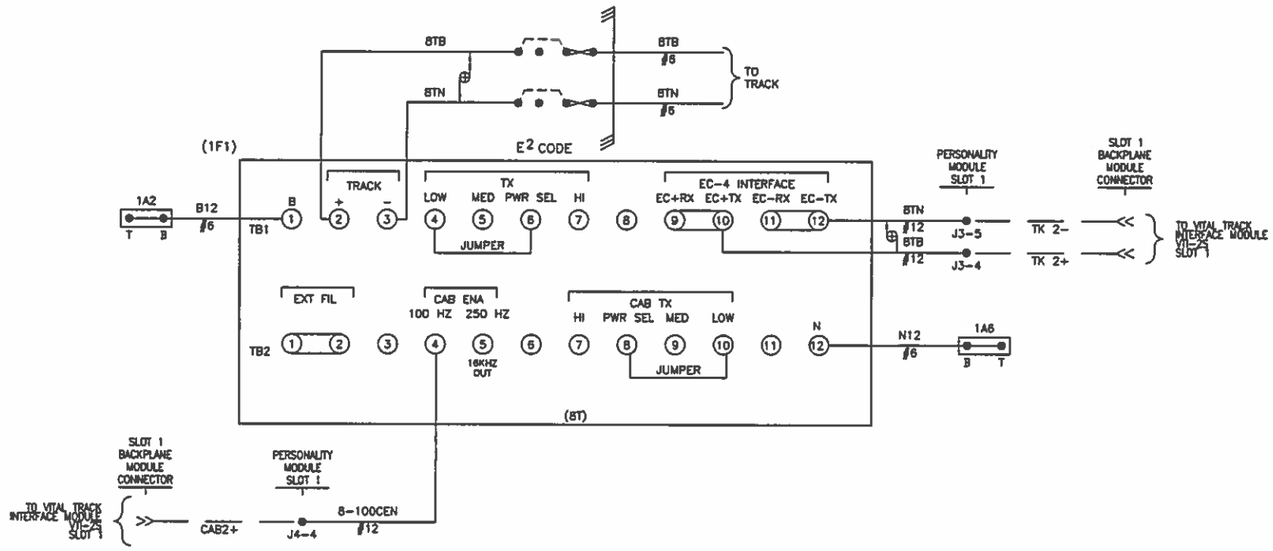

NOTES:

1) ALL WIRING ON THIS SHEET TO BE #10 A
UNLESS OTHERWISE NOTED.
2) = TWISTED PAIR 2 TURNS PER FO(
3) ---- = INTERNAL CONNECTION

REV	DATE	DESCRIPTION
1	03/06/15	AS DESIGNED

GETS
Global Signaling

Designed By:	BPC
Drawn By:	BPC
Checked By:	BDW
Approved By:	AEB

TTCI

TTT HOUSE T-6

TRACK CIRCUITS

Scale:	NTS
CADD File Name:	T6004.DWG
Submitted Date:	03/06/15
Sheet No.	004

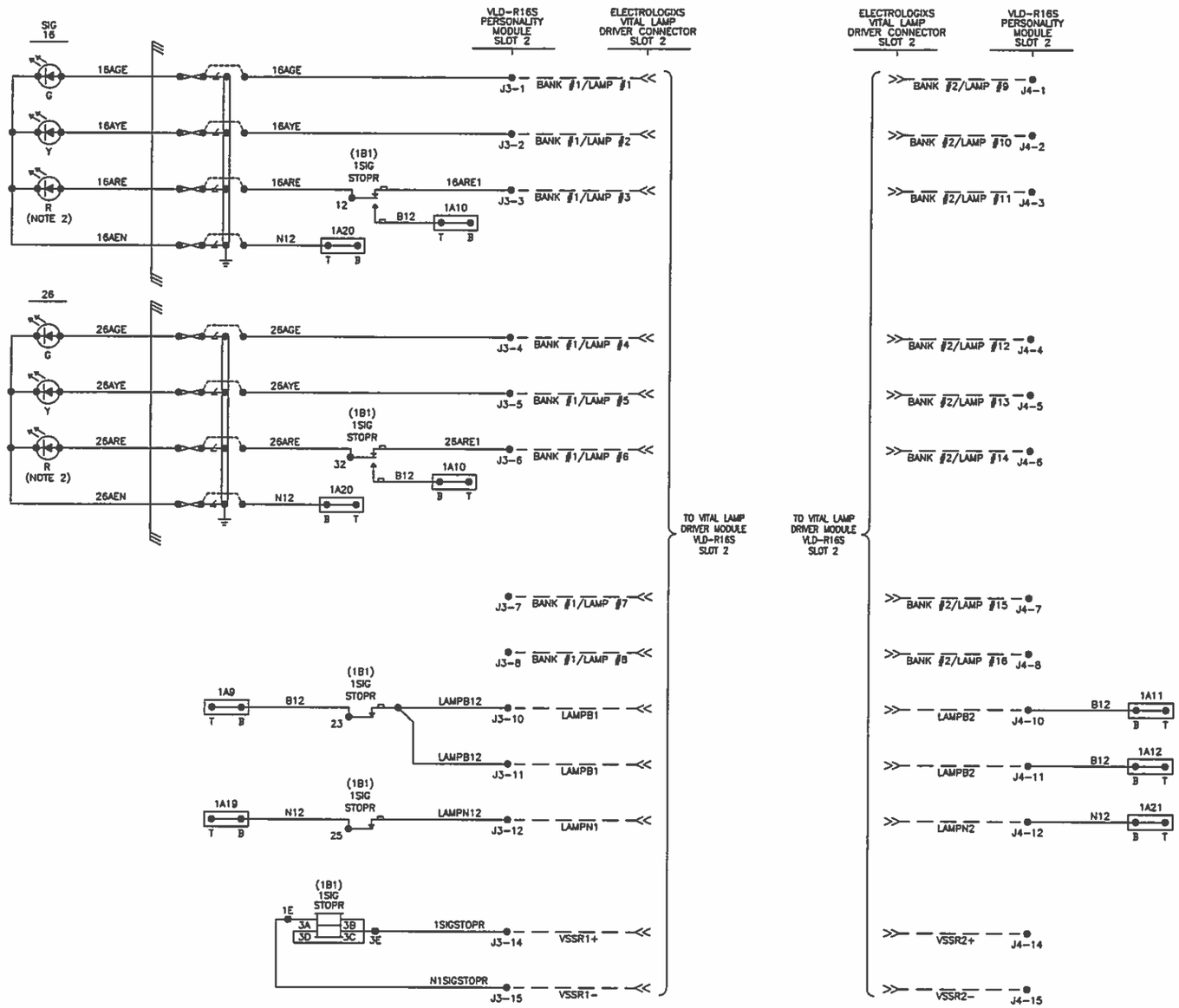

NOTES:

1) ALL WIRING ON THIS SHEET TO BE #12 AWG UNLESS OTHERWISE NOTED.
2) SIGNALS ARE GELCORE 96 SERIES

REV	DATE	DESCRIPTION
1	03/06/15	AS DESIGNED

GETS Global Signaling

Designed By:	BPC
Drawn By:	BPC
Checked By:	BDW
Approved By:	AEB

TTCI

TTT HOUSE T-6

SIGNAL LIGHTING CIRCUITS

Scale:	NTS
CADD File Name:	T6005.DWG
Submitted Date:	0306/2015
Sheet No.	005

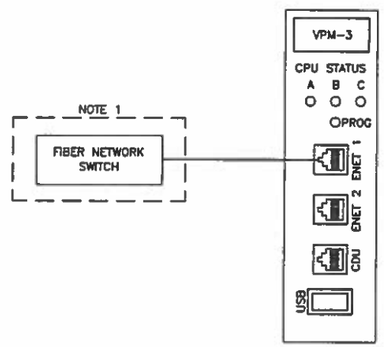

NOTES:
1) FIELD SUPPLIED

REV	DATE	DESCRIPTION
1	03/06/15	AS DESIGNED

GETS
Global Signaling

Designed By:	BPC
Drawn By:	BPC
Checked By:	BDW
Approved By:	AEB

TTCI

TTT HOUSE T-6

COMMUNICATIONS

Scale:	NTS
CADD File Name:	T6006.DWG
Submitted Date:	03/06/15
Sheet No.	006

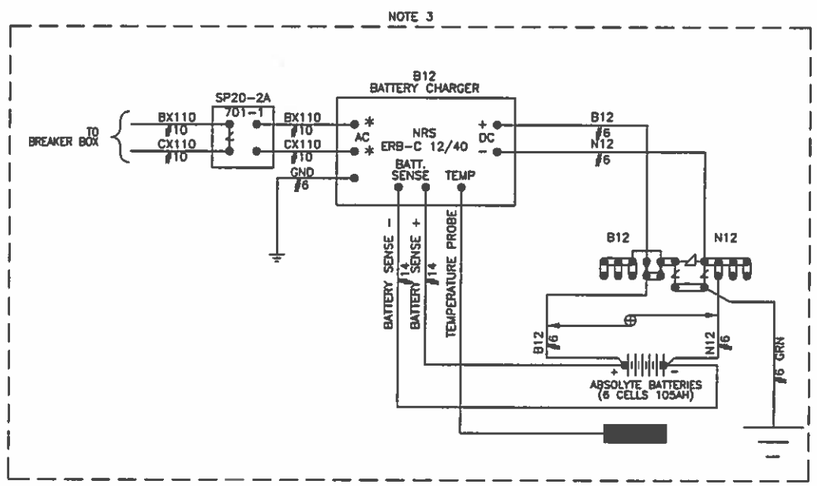

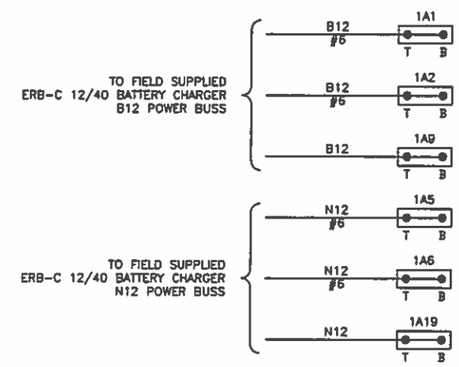

NOTES:

1) ALL SIGNAL WIRING ON THIS SHEET TO BE #10 AWG UNLESS OTHERWISE NOTED.
2) ⊕ = TWISTED PAIR 2 TURNS PER FOOT.
3) FIELD SUPPLIED

REV	DATE	DESCRIPTION
1	03/06/15	AS DESIGNED

GETS Global Signaling

Designed By:	BPC
Drawn By:	BPC
Checked By:	BDW
Approved By:	AEB

TTCI

TTT HOUSE T-6

POWER DISTRIBUTION CIRCUITS

Scale:	NTS
CADD File Name:	T6007.DWG
Submitted Date:	03/06/15
Sheet No.	007

VTI-2S
PERSONALITY
MODULE
(SLOT 1)

TK 1+	7TB	X	1
TK 1−	7TN	X	2
			3
TK 2+	8TB	X	4
TK 2−	8TN	X	5
			6
			7

J3

CAB1+	7−100CEN	X	1
CAB1−			2
			3
CAB2+	8−100CEN	X	4
CAB2−			5
			6
IN 1+	709NWP	X	7
IN 1−	N709NWP	X	8
			9
IN 2+	B12	X	10
IN 2−	N12	X	11

J4

VLD-R16S
PERSONALITY
MODULE
(SLOT 2)

BANK 1

LAMP1	16AGE	X	1
LAMP2	16AYE	X	2
LAMP3	16ARE1	X	3
LAMP4	26AGE	X	4
LAMP5	26AYE	X	5
LAMP6	26ARE1	X	6
LAMP7			7
LAMP8			8
			9
LAMPB1	LAMPB12	X	10
LAMPB1	LAMPB12	X	11
LAMPN1	LAMPN12	X	12
			13
VSSR1+	1SIGSTOPR	X	14
VSSR1−	N1SIGSTOPR	X	15

J3

BANK 2

LAMP9			1
LAMP10			2
LAMP11			3
LAMP12			4
LAMP13			5
LAMP14			6
LAMP15			7
LAMP16			8
			9
LAMPB2	B12	X	10
LAMPB2	B12	X	11
LAMPN2	N12	X	12
			13
VSSR2+			14
VSSR2−			15

J4

PERSONALITY MODULE
LEGEND

TERMINAL LABEL → XXX | XXXX | X | X ← PIN NUMBER

APPLICATION DESCRIPTION

WIRE PRESENT

REV	DATE	DESCRIPTION
1	03/06/15	AS DESIGNED

GETS
Global Signaling

Designed By:	BPC
Drawn By:	BPC
Checked By:	BDW
Approved By:	AEB

TTCI

TTT HOUSE T−6

ELECTROLOGIXS 9−SLOT
MODULE CONNECTOR USAGE

Scale:	NTS
CADD File Name:	T6008.DWG
Submitted Date:	03/06/15
Sheet No.	008

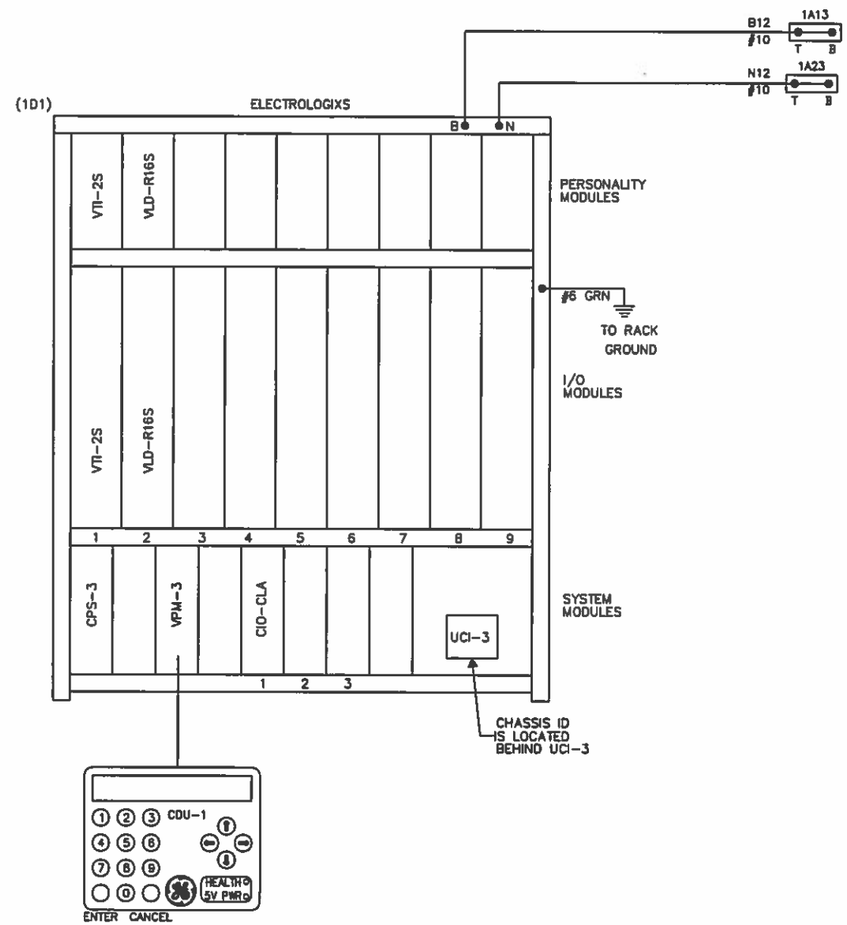

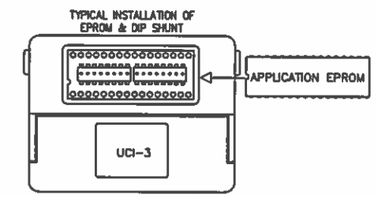

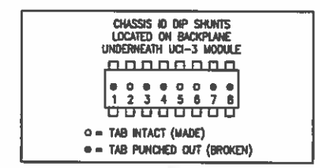

VITAL SELECTION ID-N/A

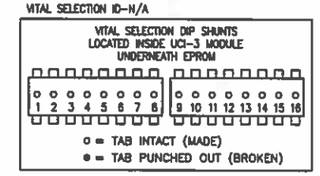

APPLICATION SOFTWARE INFORMATION	
NAME	tbd
REV.	nc
CHECKSUM	tbd
CRC	tbd

NOTES:

CDU-1 = CONTROL DISPLAY UNIT
CPS-3 = CENTRAL POWER SUPPLY
VPM-3 = VITAL PERIPHERAL MASTER MODULE
UCI-3 = CHASSIS INFORMATION MODULE
VTI-2S = VITAL TRACK INTERFACE
VLD-R16S = VITAL LAMP DRIVER MODULE
VIO-B6S = VITAL INPUTS/OUTPUTS
CIO-CLA = COMMUNICATION INPUT/OUTPUT CURRENT LOOP ADAPTER

REV	DATE	DESCRIPTION
1	03/06/15	AS DESIGNED

GETS
Global Signaling

Designed By: BPC
Drawn By: BPC
Checked By: BDW
Approved By: AEB

TTCI

TTT HOUSE T-6

ELECTROLOGIXS 9-SLOT
HARDWARE CONFIGURATION

Scale: NTS
CADD File Name: T6009.DWG
Submitted Date: 03/06/15
Sheet No. 009

SYSTEM CONFIGURATION				
DATE/TIME	SETTING MADE WHEN USING PTC CONFIGURATION			
DIAGNOSTIC PORT				
ETHERNET CONFIG.				
OFFICE CONFIG	NA			
LCP CONFIG	ENABLED	TRUE		
VITAL REMOTE CONFIG	LOCAL PORT	REMOTE PORT	REMOTE PORT CONFIG	
	ETHERNET PORT 1 192.168.40.76	1	IP	192.168.40.14
			PORT	8291
			LOCAL NETWORK ID	76
			REMOTE NETWORK ID	19
			PROTOCOL	RP2000
			DATE/TIME UPDATE	ENABLED
			MAC	DISABLED
			KEY IN USE	NO
	ETHERNET PORT 2 192.168.1.12	NA	NA	NA
	SERIAL PORT 2	NA		
	SERIAL PORT 3	NA		
TRACK CONFIG	SLOT	TRACK	CONFIGURATION	
	SLOT 1: 7T_T11	1	TRANSMITTER	4V
			RECEIVER	0.5A
			CODE 5 TYPE	ALT 5
	SLOT 1: 8T_T11	2	TRANSMITTER	4V
			RECEIVER	0.5A
			CODE 5 TYPE	ALT 5

NOTES:
1. FINAL VITAL CONFIGURATION SETTINGS ARE SUBJECT TO CHANGE IN ACCORDANCE WITH SOFTWARE UPGRADES. FINAL VITAL CONFIGURATION SETTINGS TO BE UPDATED ON AS-IN-SERVICE.

REV	DATE	DESCRIPTION
1	03/06/15	AS DESIGNED

GETS
Global Signaling

Designed By: BPC
Drawn By: BPC
Checked By: BDW
Approved By: AEB

TTCI

TTT HOUSE T-6

ELECTROLOGIXS 9-SLOT CONFIGURATION SETTINGS

Scale: NTS
CADD File Name: T6010.DWG
Submitted Date: 03/06/15
Sheet No. 010

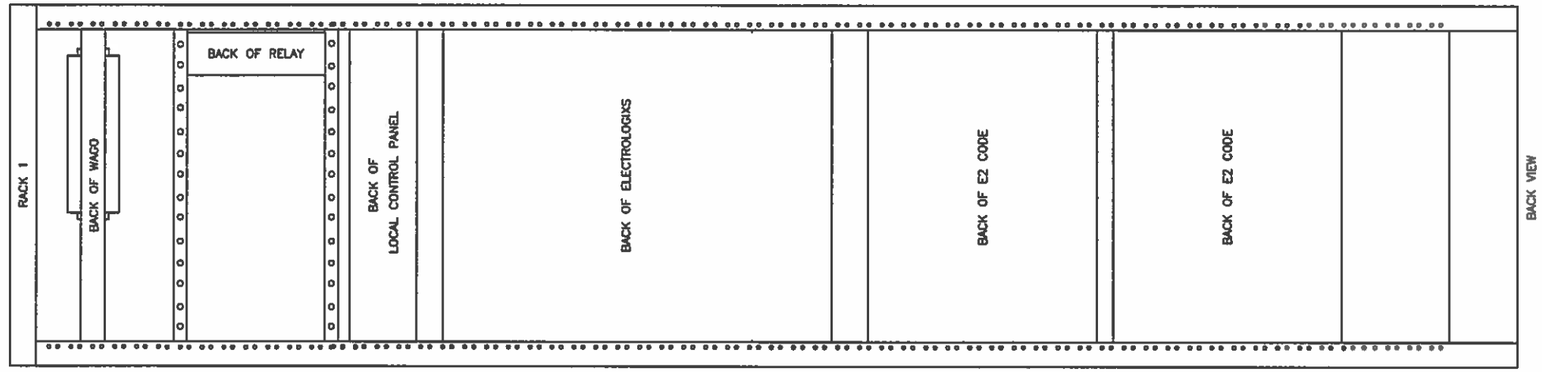

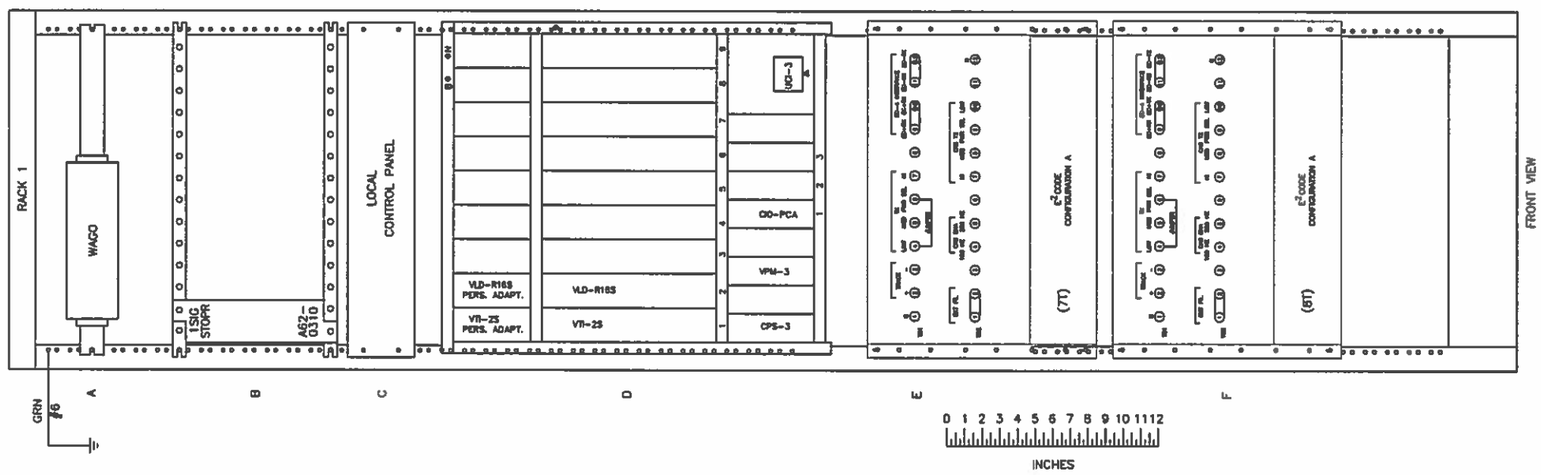

REV	DATE	DESCRIPTION
1	03/06/15	AS DESIGNED

GETS
Global Signaling

Designed By:	BPC
Drawn By:	BPC
Checked By:	BDW
Approved By:	AEB

TTCI

TTT HOUSE T-6

RACK 1 LAYOUT

Scale:	NTS
CADD File Name:	T6011.DWG
Submitted Date:	03/06/15
Sheet No.	011

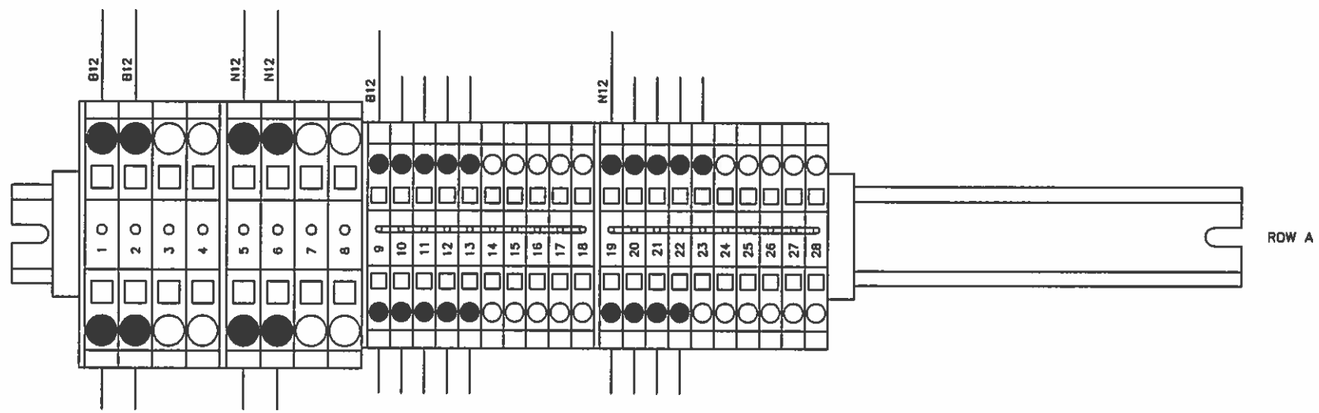

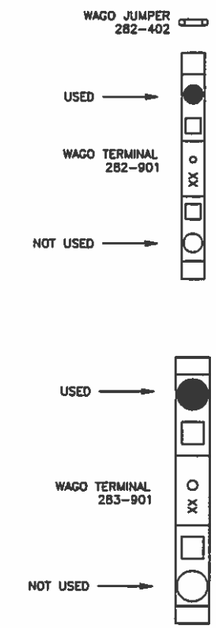

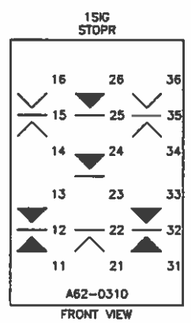

REV	DATE	DESCRIPTION
1	03/06/15	AS DESIGNED

GETS
Global Signaling

Designed By:	BPC
Drawn By:	BPC
Checked By:	BDW
Approved By:	AEB

TTCI

TTT HOUSE T-6

WAGO & RELAY LAYOUT
RACK 1, ROW A & B

Scale:	NTS
CADD File Name:	T6012.DWG
Submitted Date:	03/06/15
Sheet No.	012

LCP DIP SWITCH SETTINGS

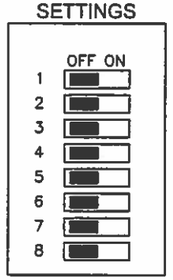

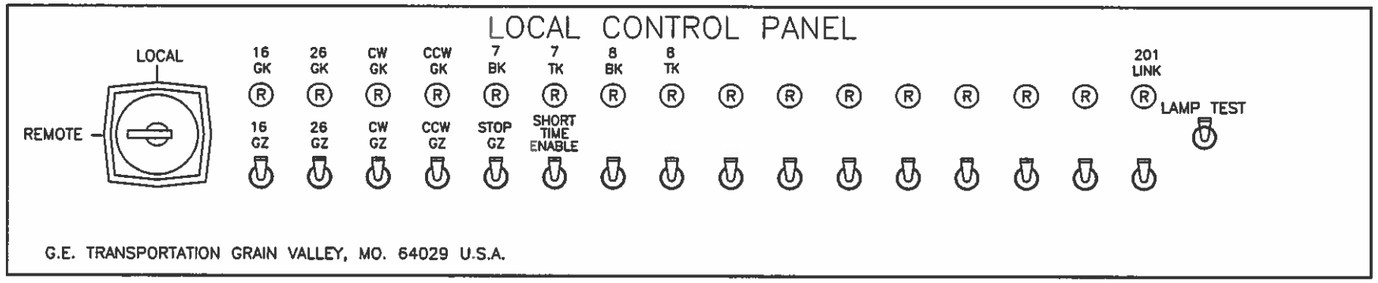

ROW C

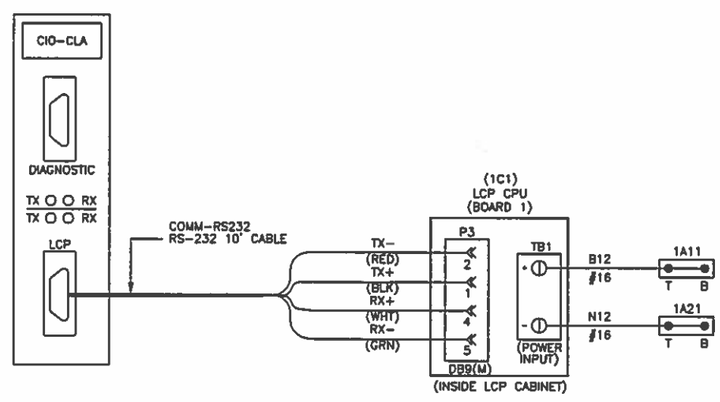

REV	DATE	DESCRIPTION
1	03/06/15	AS DESIGNED

GETS
Global Signaling

Designed By:	BPC
Drawn By:	BPC
Checked By:	BDW
Approved By:	AEB

TTCI

TTT HOUSE T-6

LOCAL CONTROL PANEL

Scale:	NTS
CADD File Name:	T6013.DWG
Submitted Date:	03/06/15
Sheet No.	013

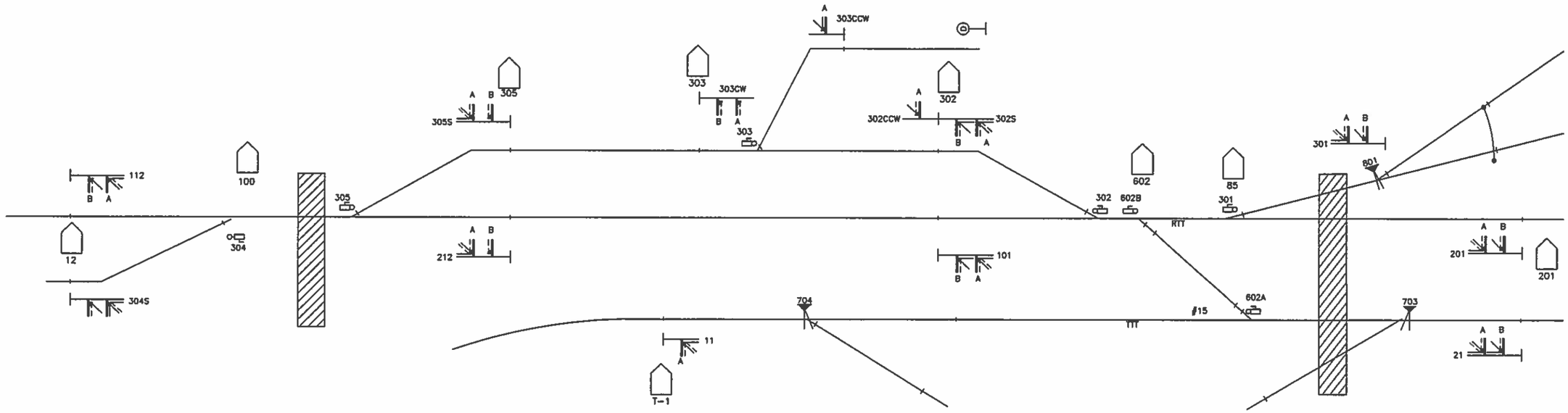

HOUSE_12

RACK 1	
IP ADDRESS: 192.168.40.11	
REMOTE 1	
RP2000 PORT	8280
NETWORK ID	10
REMOTE 2	
RP2000 PORT	8281
NETWORK ID	11
REMOTE 3	
RP2000 PORT	8282
NETWORK ID	12
REMOTE 4	
RP2000 PORT	8288
NETWORK ID	13
REMOTE 5	
RP2000 PORT	8285
NETWORK ID	14

TO HOUSE < 248

POST_100

RACK 1	
IP ADDRESS: 192.168.40.13	
REMOTE 1	
RP2000 PORT	8280
NETWORK ID	4

HOUSE_305

RACK 1	
IP ADDRESS: 192.168.40.15	
REMOTE 1	
RP2000 PORT	8281
NETWORK ID	5

HOUSE_303

RACK 1	
IP ADDRESS: 192.168.40.12	
REMOTE 1	
RP2000 PORT	8285
NETWORK ID	6
REMOTE 2	
RP2000 PORT	8286
NETWORK ID	7

HOUSE_302

RACK 1	
IP ADDRESS: 192.168.40.18	
REMOTE 1	
RP2000 PORT	8283
NETWORK ID	770
REMOTE 2	
RP2000 PORT	8282
NETWORK ID	119
REMOTE 3	
RP2000 PORT	8287
NETWORK ID	15

RACK 2	
IP ADDRESS: 192.168.40.17	
REMOTE 1	
RP2000 PORT	8286
NETWORK ID	8
REMOTE 2	
RP2000 PORT	8287
NETWORK ID	9

HOUSE_602

RACK 1	
RS400 IP ADDRESS: 192.168.40.16	
RP2000 PORT	8283
NETWORK ID	16
RAW SOCKET	COM 2
VHLC RS232 PORT	B
RP2000 PORT	8284
NETWORK ID	16
RAW SOCKET	COM 4
VHLC RS232 PORT	D

HOUSE_T-1

RACK 1	
IP ADDRESS: 192.168.40.71	
REMOTE 1	
RP2000 PORT	8290
NETWORK ID	71

HOUSE_201

RACK 1	
IP ADDRESS: 192.168.40.14	
REMOTE 1	
RP2000 PORT	8284
NETWORK ID	513
REMOTE 2	
RP2000 PORT	8290
NETWORK ID	18
REMOTE 3	
RP2000 PORT	8291
NETWORK ID	19

HOUSE_T-6

RACK 1	
IP ADDRESS: 192.168.40.76	
REMOTE 1	
RP2000 PORT	8291
NETWORK ID	76

REV	DATE	DESCRIPTION
1	03/06/15	AS DESIGNED

GETS Global Signaling

Designed By: BPC
Drawn By: BPC
Checked By: DBW
Approved By: AEB

TTCI

TTT HOUSE T-6

RTT/TTT VITAL REMOTE NETWORKS

Scale: NTS
CADD File Name: T6014.DWG
Submitted Date: 03/06/15
Sheet No. 014

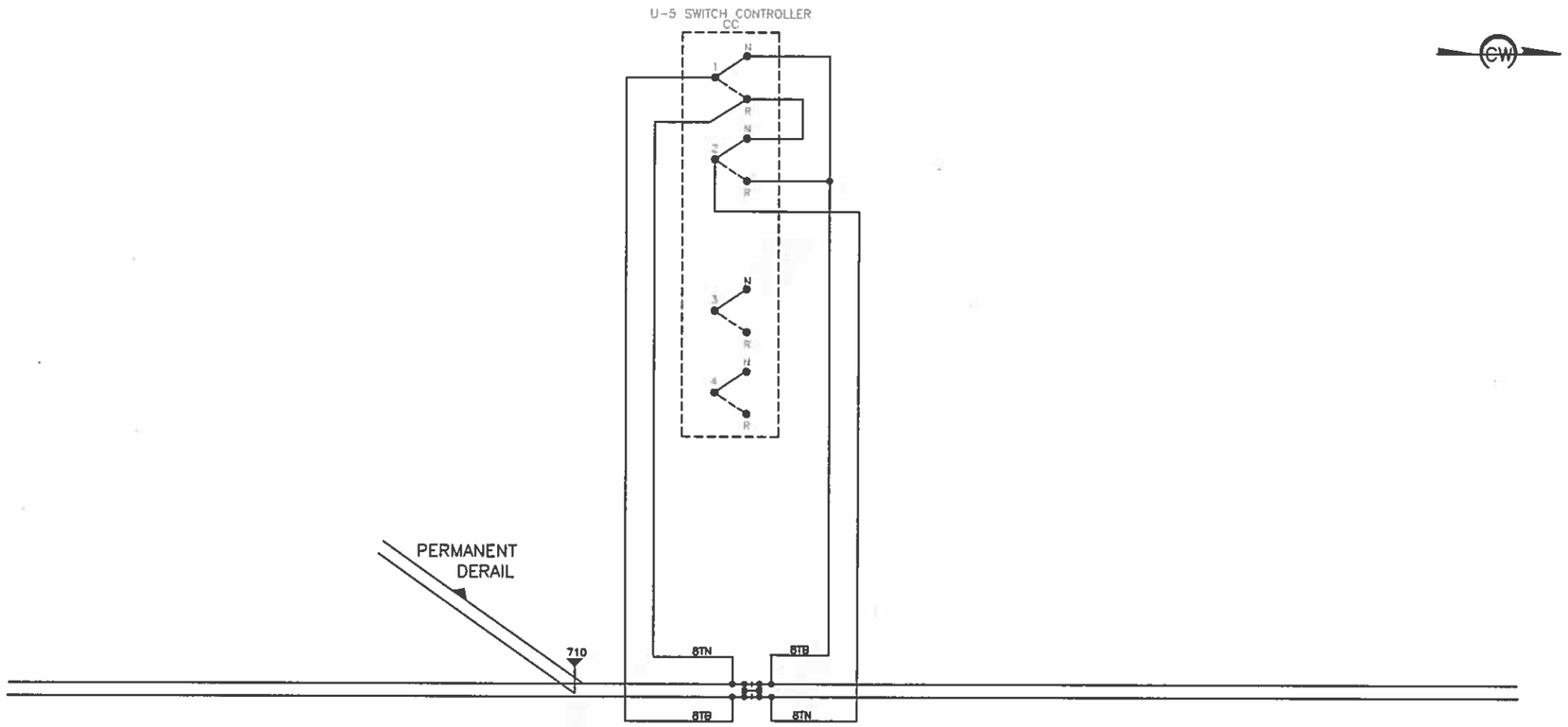

NOTES:

1. WHEN THE HANDTHROW SWITCH IS IN THE NORMAL POSITION THE CIRCUIT CONTROLLER WILL BYPASS THE INSULATED JOINTS COMPLETING THE TRACK CIRCUIT.
2. WHEN THE HANDTHROW SWITCH IS NOT NORMAL THE CIRCUIT CONTROLLER WILL SHUNT THE TRACK ON BOTH SIDES OF THE INSULATED JOINT.
3. A PERMANENT DERAIL MUST BE INSTALLED AT THE FOULING POINT.
4. ALL WIRING ON THIS SHEET TO BE #6 AWG.
5. IMPEDANCE BOND AND INSULATED JOINTS SHOWN SHOULD BE ADDED IN CLOSE PROXIMITY TO THE SWITCH TO MINIMIZE CABLE LENGTH.

REV	DATE	DESCRIPTION
1	03/11/15	AS DESIGNED

GETS
Global Signaling

Designed By:	BPC
Drawn By:	BPC
Checked By:	BDW
Approved By:	AEB

TTCI

TTT
HANDTHROW SWITCH
710

Scale:	NTS
CADD File Name:	TSW710.DWG
Submitted Date:	03/10/15
Sheet No.	000

HOUSE T-7

REV	DATE	DESCRIPTION
1	03/11/15	AS DESIGNED

GETS
Global Signaling

Designed By:	BPC
Drawn By:	BPC
Checked By:	BDW
Approved By:	AEB

TTCI

TTT HOUSE T-7

COVER SHEET

Scale:	NTS
CADD File Name:	T7000.DWG
Submitted Date:	03/11/15
Sheet No.	000

INDEX OF DRAWINGS			
SHT. NO.	DWG. NO.	REV.	DESCRIPTION
000	T7000.DWG	1	COVER SHEET
001	T7001.DWG	1	INDEX
002	T7002.DWG	1	TRACK & SIGNAL PLAN
003	T7003.DWG	1	CODE & ASPECT CHART
004	T7004.DWG	1	TRACK CIRCUITS
005	T7005.DWG	1	POWER DISTRIBUTION CIRCUITS
006	T7006.DWG	1	ELECTROLOGIXS 4-SLOT MODULE CONNECTOR USAGE
007	T7007.DWG	1	ELECTROLOGIXS 4-SLOT HARDWARE CONFIGURATION
008	T7008.DWG	1	ELECTROLOGIXS 4-SLOT CONFIGURATION SETTINGS
009	T7009.DWG	1	RACK 1 LAYOUT
010	T7010.DWG	1	WAGO & RELAY LAYOUT RACK 1, ROW A & B

REV	DATE	DESCRIPTION
1	03/11/15	AS DESIGNED

GETS
Global Signaling

Designed By: BPC
Drawn By: BPC
Checked By: BDW
Approved By: AEB

TTCI

TTT HOUSE T-7

INDEX

Scale: NTS
CADD File Name: T7001.DWG
Submitted Date: 03/11/15
Sheet No. 001

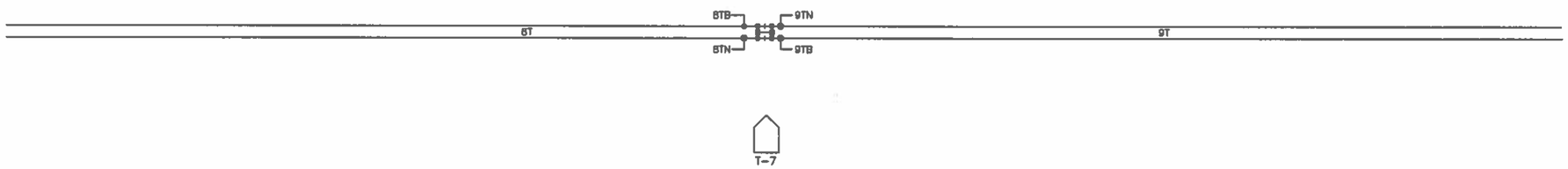

REV	DATE	DESCRIPTION
1	03/11/15	AS DESIGNED

GETS
Global Signaling

Designed By: BPC
Drawn By: BPC
Checked By: BDW
Approved By: AEB

TTCI

TTT HOUSE T-7

TRACK & SIGNAL PLAN

Scale: NTS
CADD File Name: T7002.DWG
Submitted Date: 03/11/15
Sheet No. 002

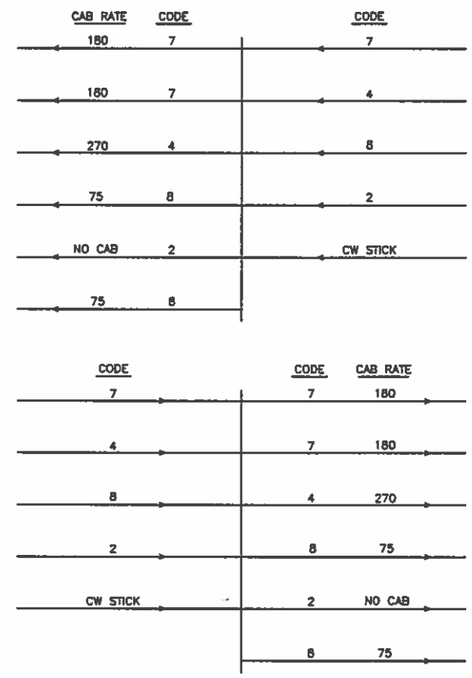

TTT CAB RATE TABLE		
NAME	DESIGNATOR	RATE
CLEAR	C	180
CAB SPEED	CS	270
APPROACH LIMITED	AL?	120
APPROACH	A	75
RESTRICTING	R	NO CAB

REV	DATE	DESCRIPTION
1	03/11/15	AS DESIGNED

GETS
Global Signaling

Designed By: BPC
Drawn By: BPC
Checked By: BDW
Approved By: AEB

TTCI

TTT HOUSE T-7

CODE & ASPECT CHART

Scale: NTS
CADD File Name: T7003.DWG
Submitted Date: 03/11/15
Sheet No. 003

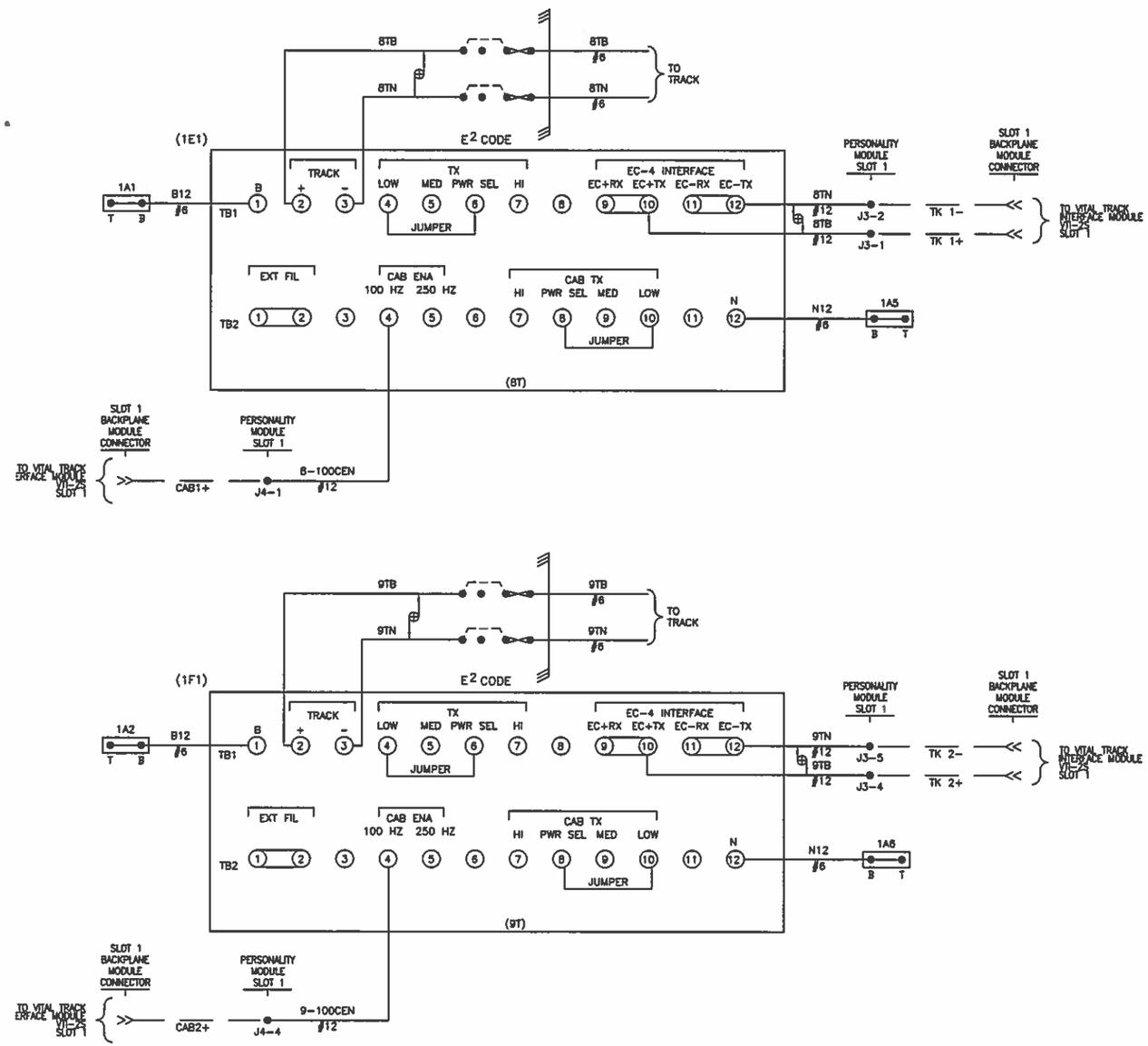

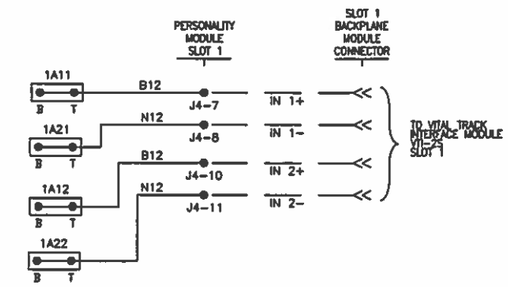

NOTES:

1) ALL WIRING ON THIS SHEET TO BE #10 AWG UNLESS OTHERWISE NOTED.
2) ⊕ = TWISTED PAIR 2 TURNS PER FOOT.
3) ---- = INTERNAL CONNECTION

REV	DATE	DESCRIPTION
1	03/11/15	AS DESIGNED

GETS Global Signaling

Designed By:	BPC
Drawn By:	BPC
Checked By:	BDW
Approved By:	AEB

TTCI

TTT HOUSE T-7

TRACK CIRCUITS

Scale:	NTS
CADD File Name:	T7004.DWG
Submitted Date:	03/11/15
Sheet No.	004

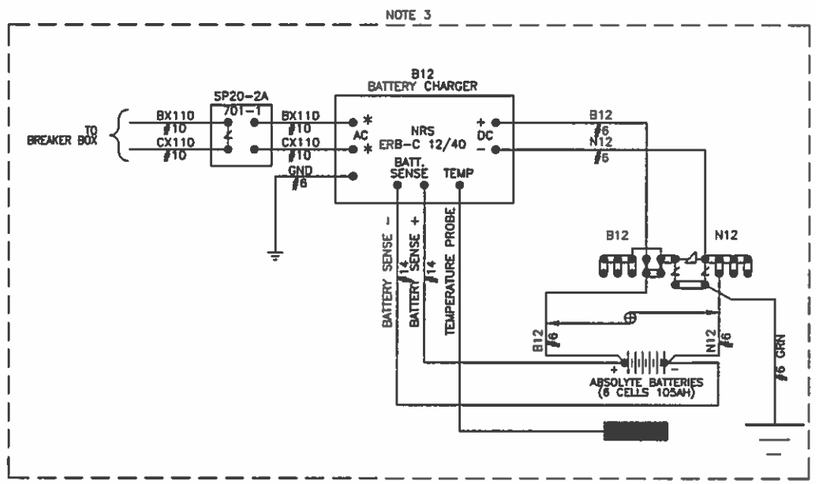

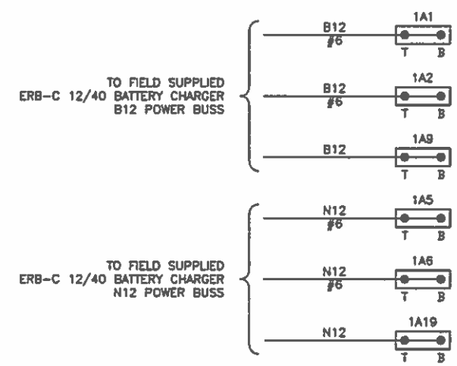

NOTES:

1) ALL SIGNAL WIRING ON THIS SHEET TO BE #10 AWG UNLESS OTHERWISE NOTED.
2) = TWISTED PAIR 2 TURNS PER FOOT.
3) FIELD SUPPLIED

REV	DATE	DESCRIPTION
1	03/11/15	AS DESIGNED

GETS
Global Signaling

Designed By:	BPC
Drawn By:	BPC
Checked By:	BDW
Approved By:	AEB

TTCI

TTT HOUSE T-7

POWER DISTRIBUTION CIRCUITS

Scale	NTS
CADD File Name	T7005.DWG
Submitted Date	03/11/15
Sheet No.	005

VTI-2S
PERSONALITY
MODULE
(SLOT 1)

TK 1+	8TB	X	1
TK 1−	8TN	X	2
			3
TK 2+	9TB	X	4
TK 2−	9TN	X	5
			6
			7

J3

CAB1+	8−100CEN	X	1
CAB1−			2
			3
CAB2+	9−100CEN	X	4
CAB2−			5
			6
IN 1+	B12	X	7
IN 1−	N12	X	8
			9
IN 2+	B12	X	10
IN 2−	N12	X	11

J4

PERSONALITY MODULE
LEGEND

TERMINAL LABEL → XXX | XXXX | X | X ← PIN NUMBER

APPLICATION DESCRIPTION

WIRE PRESENT

REV	DATE	DESCRIPTION
1	03/06/15	AS DESIGNED

GETS
Global Signaling

Designed By: BPC
Drawn By: BPC
Checked By: BDW
Approved By: AEB

TTCI

TTT HOUSE T−7

ELECTROLOGIXS 4−SLOT
MODULE CONNECTOR USAGE

Scale: NTS
CADD File Name: T7006.DWG
Submitted Date: 03/11/15
Sheet No. 006

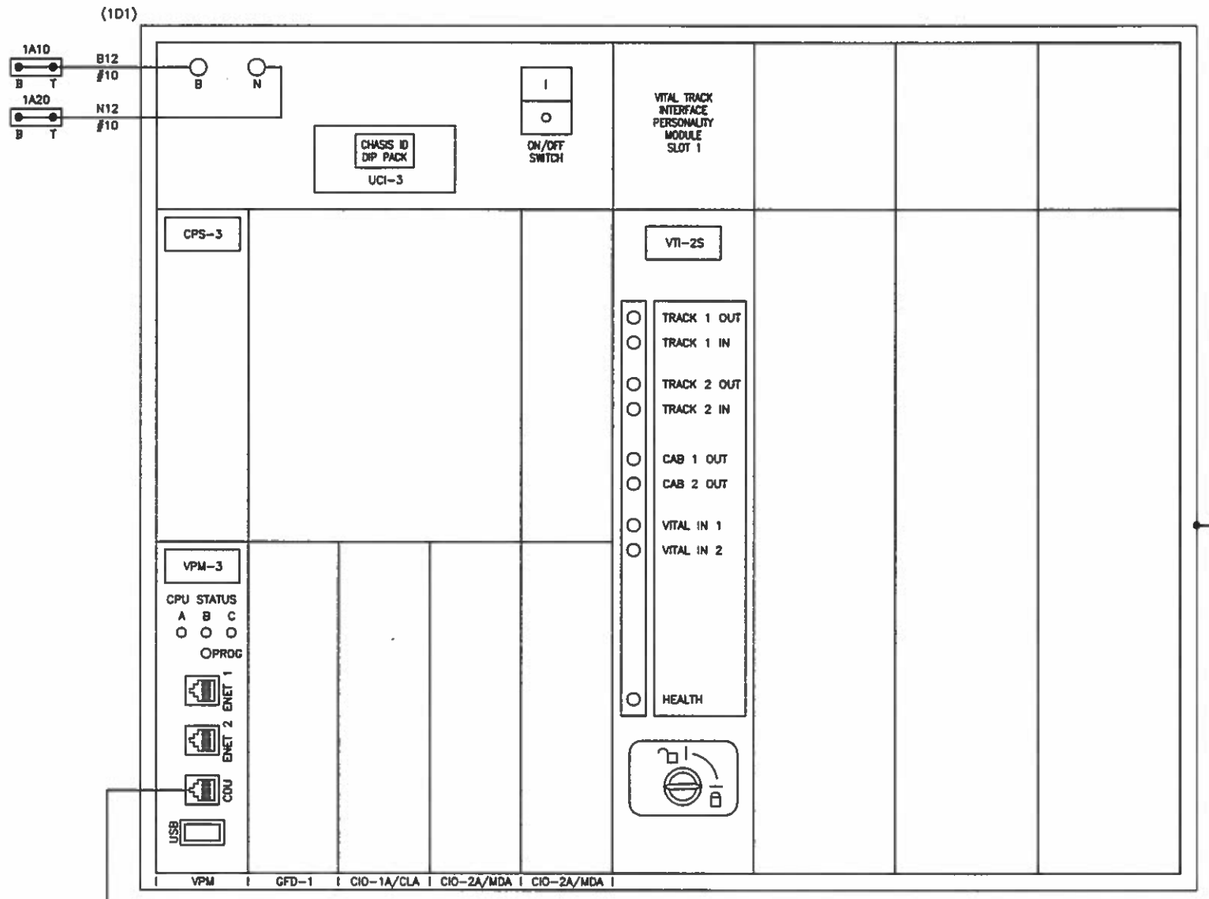

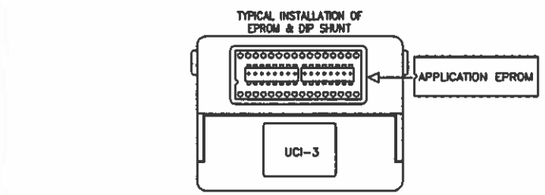

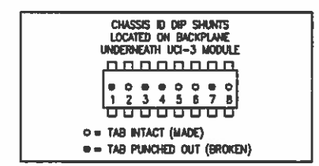

VITAL SELECTION ID-N/A

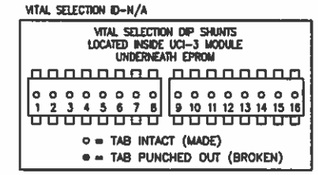

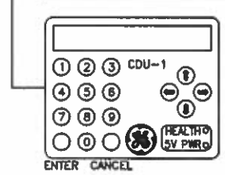

APPLICATION SOFTWARE INFORMATION	
NAME	
REV.	
CHECKSUM	
CRC	

NOTES:

CDU-1 = CONTROL DISPLAY UNIT
CPS-3 = CENTRAL POWER SUPPLY
VPM-3 = VITAL PERIPHERAL MASTER MODULE
UCI-3 = CHASSIS INFORMATION MODULE
VTI-2S = VITAL TRACK INTERFACE
VLD-R16S = VITAL LAMP DRIVER MODULE
VIO-86S = VITAL INPUTS/OUTPUTS
CIO-CLA = COMMUNICATION INPUT/OUTPUT CURRENT LOOP ADAPTER

REV	DATE	DESCRIPTION
1	03/11/15	AS DESIGNED

GETS
Global Signaling

Designed By: BPC
Drawn By: BPC
Checked By: BDW
Approved By: AEB

TTCI

TTT HOUSE T-7

ELECTROLOGIXS 4-SLOT
HARDWARE CONFIGURATION

Scale: NTS
CADD File Name: T7007.DWG
Submitted Date: 03/11/15
Sheet No. 007

SYSTEM CONFIGURATION				
DATE/TIME	SETTING MADE WHEN USING PTC CONFIGURATION			
DIAGNOSTIC PORT				
ETHERNET CONFIG.				
OFFICE CONFIG	NA			
LCP CONFIG	ENABLED	TRUE		
VITAL REMOTE CONFIG	LOCAL PORT	REMOTE PORT	REMOTE PORT CONFIG	
	ETHERNET PORT 1 192.168.40.77	NA	NA	NA
	ETHERNET PORT 2 192.168.1.12	NA	NA	NA
	SERIAL PORT 2	NA		
	SERIAL PORT 3	NA		
TRACK CONFIG	SLOT	TRACK	CONFIGURATION	
	SLOT 1: 8T_TI1	1	TRANSMITTER	4V
			RECEIVER	0.5A
			CODE 5 TYPE	ALT 5
	SLOT 1: 9T_TI1	2	TRANSMITTER	4V
			RECEIVER	0.5A
			CODE 5 TYPE	ALT 5

NOTES:
1. FINAL VITAL CONFIGURATION SETTINGS ARE SUBJECT TO CHANGE IN ACCORDANCE WITH SOFTWARE UPGRADES. FINAL VITAL CONFIGURATION SETTINGS TO BE UPDATED ON AS-IN-SERVICE.

REV	DATE	DESCRIPTION
1	03/11/15	AS DESIGNED

GETS
Global Signaling

Designed By: BPC
Drawn By: BPC
Checked By: BDW
Approved By: AEB

TTCI

TTT HOUSE T-7

ELECTROLOGIXS 4-SLOT
CONFIGURATION SETTINGS

Scale: NTS
CADD File Name: T7008.DWG
Submitted Date: 03/11/15
Sheet No. 008

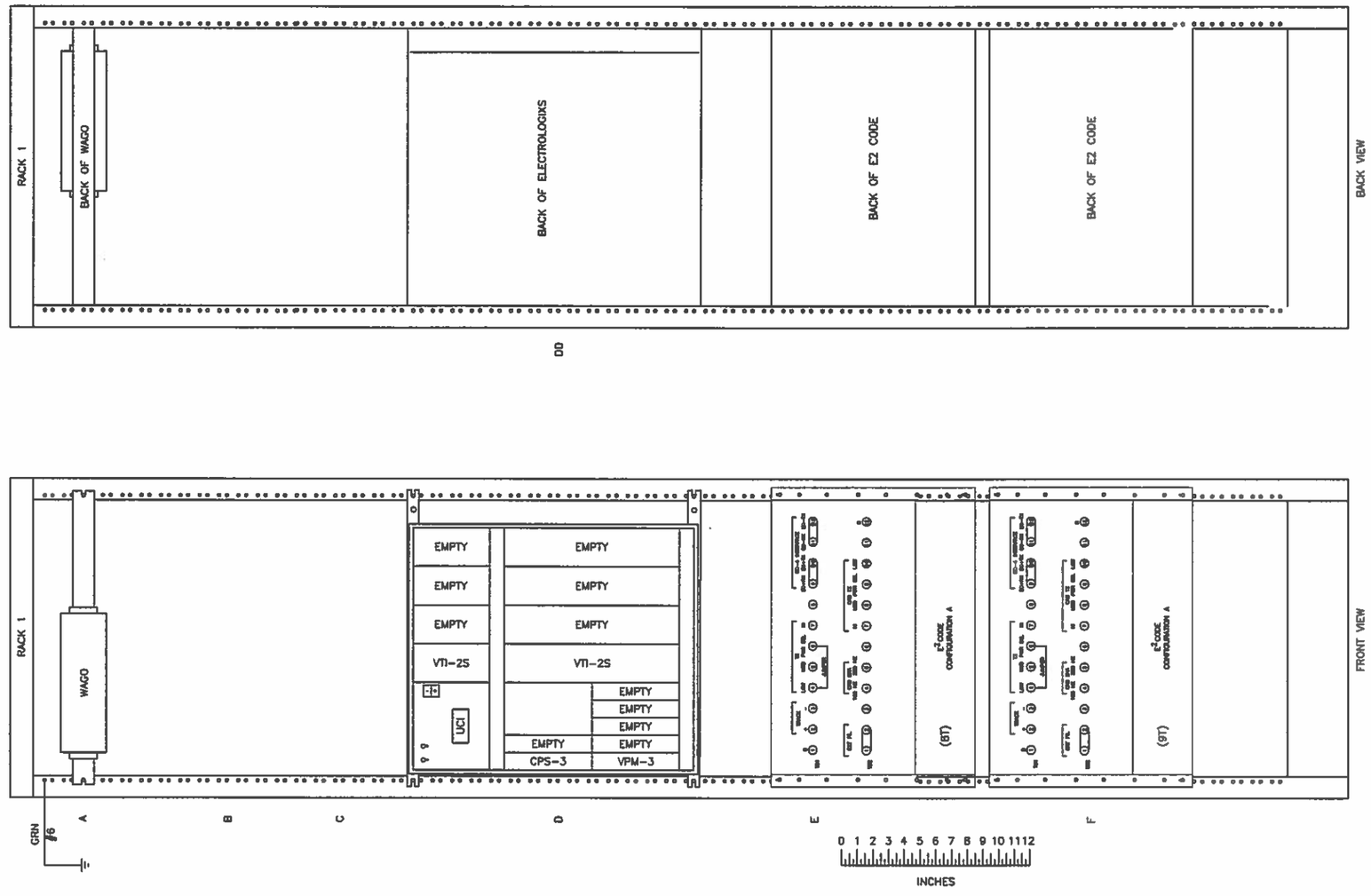

REV	DATE	DESCRIPTION
1	03/11/15	AS DESIGNED

GETS
Global Signaling

Designed By:	BPC
Drawn By:	BPC
Checked By:	BDW
Approved By:	AEB

TTCI

TTT HOUSE T-7

RACK 1 LAYOUT

Scale:	NTS
CADD File Name:	T7009.DWG
Submitted Date:	03/11/15
Sheet No.	009

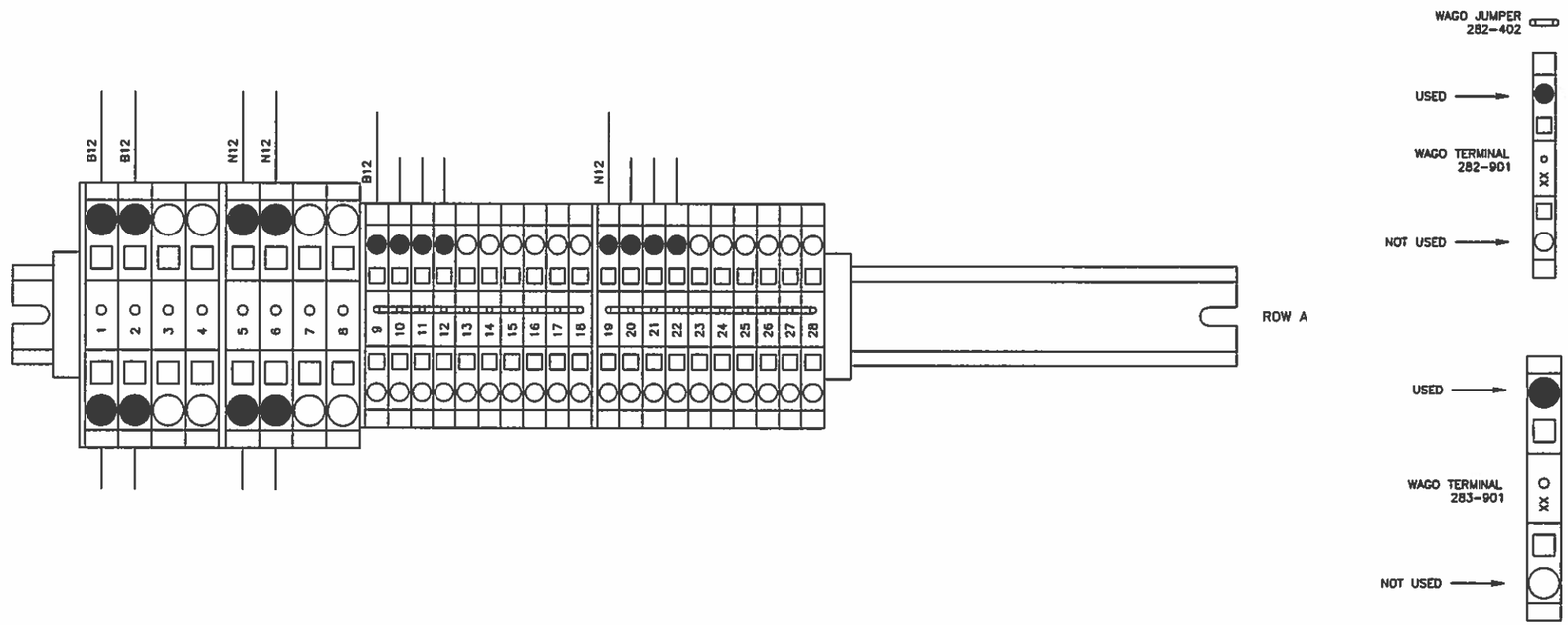

REV	DATE	DESCRIPTION
1	03/11/15	AS DESIGNED

GETS
Global Signaling

Designed By:	BPC
Drawn By:	BPC
Checked By:	BDW
Approved By:	AEB

TTCI

TTT HOUSE T-7

WAGO & RELAY LAYOUT
RACK 1, ROW A & B

Scale:	NTS
CADD File Name:	T7010.DWG
Submitted Date:	03/11/15
Sheet No.	010

HOUSE T-8

REV	DATE	DESCRIPTION
1	03/11/15	AS DESIGNED

GETS
Global Signaling

Designed By:	BPC
Drawn By:	BPC
Checked By:	BDW
Approved By:	AEB

TTCI

TTT HOUSE T-8

COVER SHEET

Scale:	NTS
CADD File Name:	T8000.DWG
Submitted Date:	03/11/15
Sheet No.	000

INDEX OF DRAWINGS			
SHT. NO.	DWG. NO.	REV.	DESCRIPTION
000	T8000.DWG	1	COVER SHEET
001	T8001.DWG	1	INDEX
002	T8002.DWG	1	TRACK & SIGNAL PLAN
003	T8003.DWG	1	CODE & ASPECT CHART
004	T8004.DWG	1	TRACK CIRCUITS
005	T8005.DWG	1	POWER DISTRIBUTION CIRCUITS
006	T8006.DWG	1	ELECTROLOGIXS 4-SLOT MODULE CONNECTOR USAGE
007	T8007.DWG	1	ELECTROLOGIXS 4-SLOT HARDWARE CONFIGURATION
008	T8008.DWG	1	ELECTROLOGIXS 4-SLOT CONFIGURATION SETTINGS
009	T8009.DWG	1	RACK 1 LAYOUT
010	T8010.DWG	1	WAGO & RELAY LAYOUT RACK 1, ROW A & B

REV	DATE	DESCRIPTION
1	03/11/15	AS DESIGNED

GETS
Global Signaling

Designed By: BPC
Drawn By: BPC
Checked By: BDW
Approved By: AEB

TTCI

TTT HOUSE T-8

INDEX

Scale: NTS
CADD File Name: T8001.DWG
Submitted Date: 03/11/15
Sheet No. 001

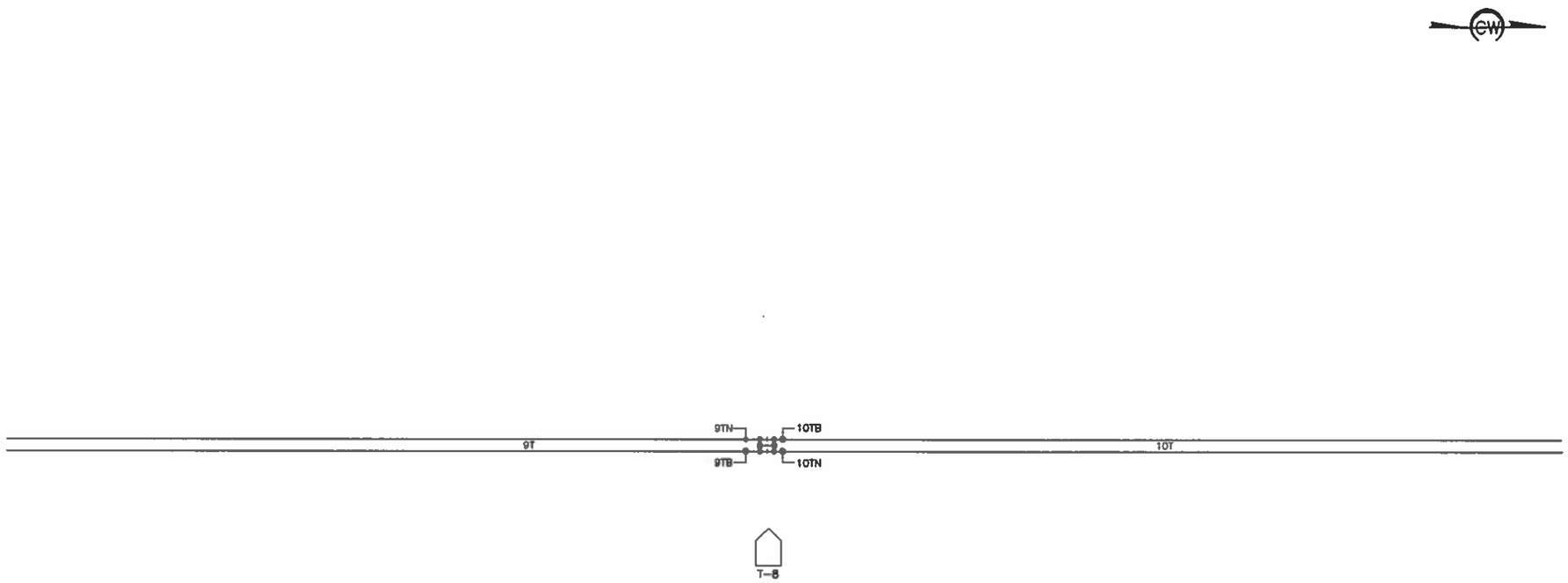

REV	DATE	DESCRIPTION
1	03/11/15	AS DESIGNED

GETS
Global Signaling

Designed By: BPC
Drawn By: BPC
Checked By: BDW
Approved By: AEB

TTCI

TTT HOUSE T-8

TRACK & SIGNAL PLAN

Scale: NTS
CADD File Name: T8002.DWG
Submitted Date: 03/11/15
Sheet No. 002

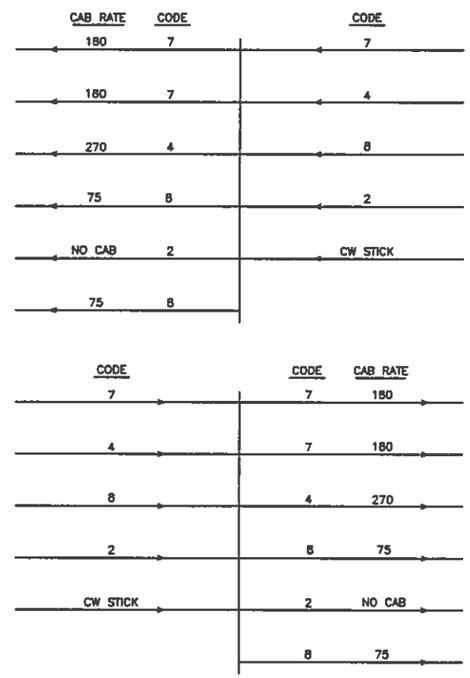

TTT CAB RATE TABLE		
NAME	DESIGNATOR	RATE
CLEAR	C	180
CAB SPEED	CS	270
APPROACH LIMITED	AL7	120
APPROACH	A	75
RESTRICTING	R	NO CAB

REV	DATE	DESCRIPTION
1	03/11/15	AS DESIGNED

GETS
Global Signaling

Designed By: BPC
Drawn By: BPC
Checked By: BDW
Approved By: AEB

TTCI

TTT HOUSE T-8

CODE & ASPECT CHART

Scale: NTS
CADD File Name: T8003.DWG
Submitted Date: 03/11/15
Sheet No. 003

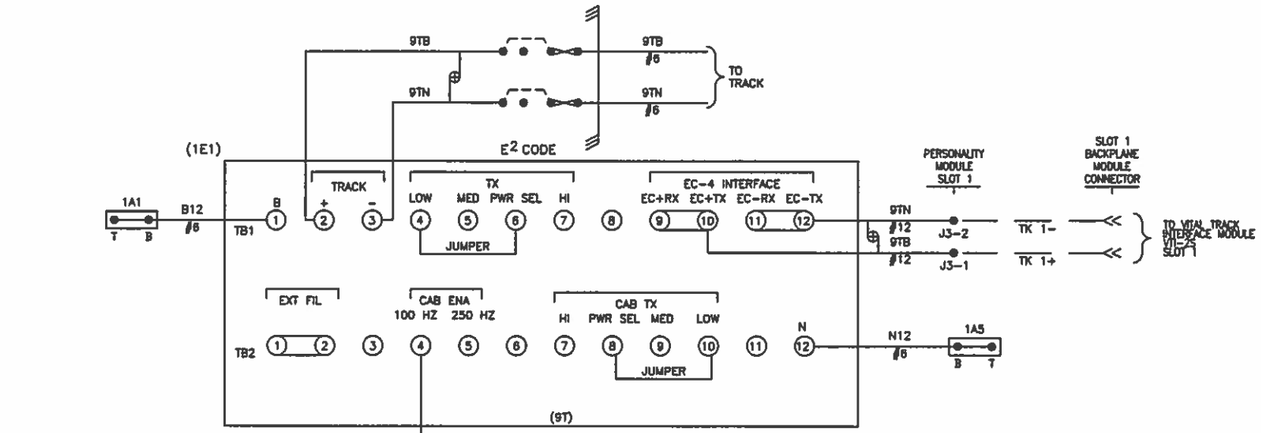

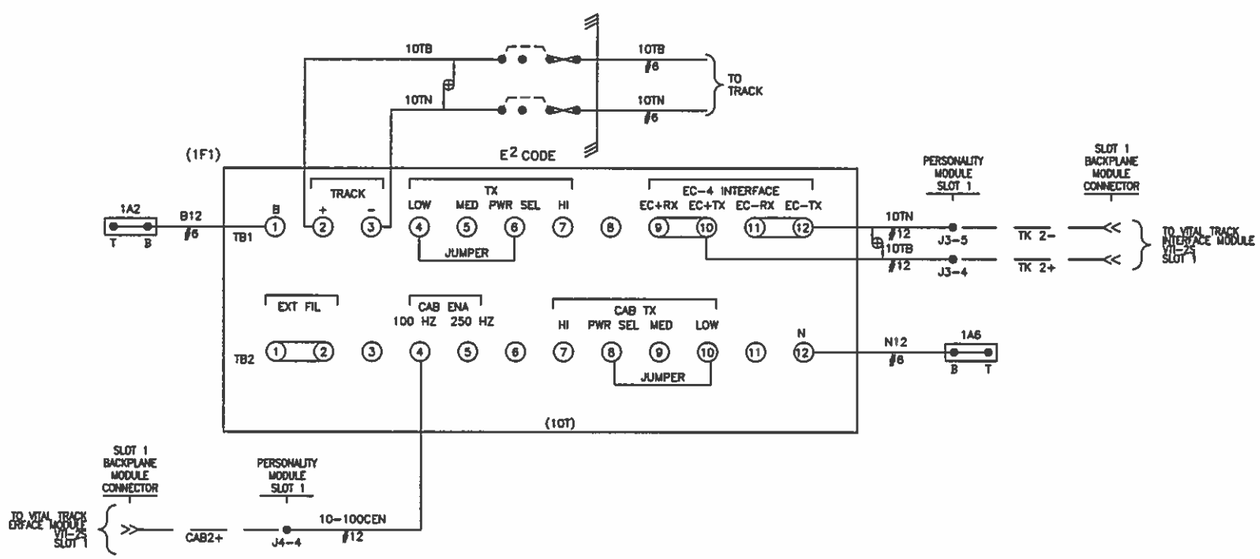

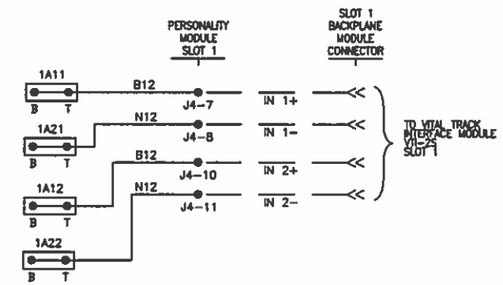

NOTES:

1) ALL WIRING ON THIS SHEET TO BE #10 AWG UNLESS OTHERWISE NOTED.
2) ⊕ = TWISTED PAIR 2 TURNS PER FOOT.
3) ---- = INTERNAL CONNECTION

REV	DATE	DESCRIPTION
1	03/11/15	AS DESIGNED

GETS Global Signaling

Designed By:	BPC
Drawn By:	BPC
Checked By:	BDW
Approved By:	AEB

TTCI

TTT HOUSE T-8

TRACK CIRCUITS

Scale:	NTS
CADD File Name:	T8004.DWG
Submitted Date:	03/11/15
Sheet No.	004

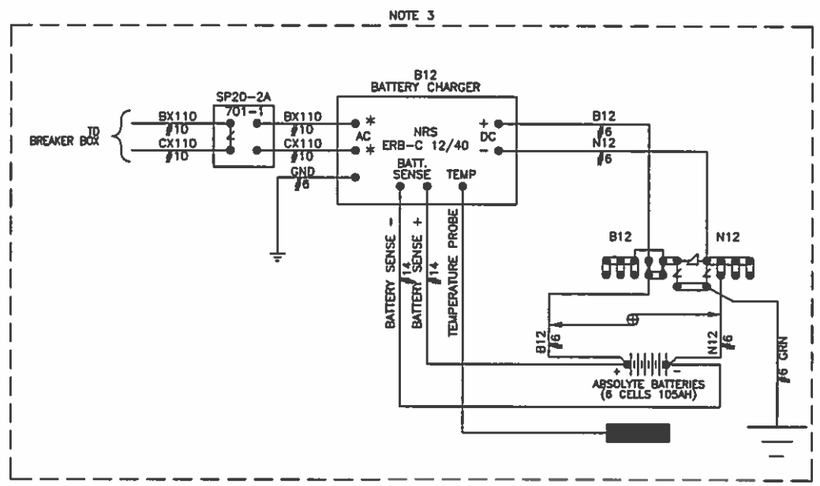

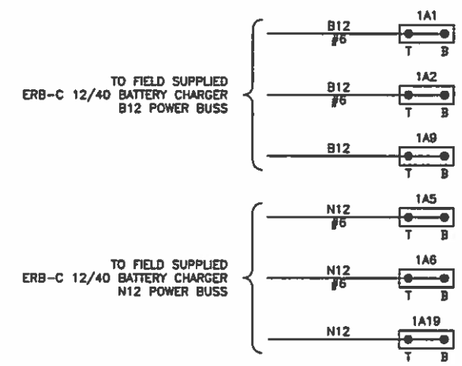

NOTES:

1) ALL SIGNAL WIRING ON THIS SHEET TO BE #10 AWG UNLESS OTHERWISE NOTED.
2) = TWISTED PAIR 2 TURNS PER FOOT.
3) FIELD SUPPLIED

REV	DATE	DESCRIPTION
1	03/11/15	AS DESIGNED

GETS
Global Signaling

Designed By: BPC
Drawn By: BPC
Checked By: BDW
Approved By: AEB

TTCI

TTT HOUSE T-8

POWER DISTRIBUTION CIRCUITS

Scale: NTS
CADD File Name: T8005.DWG
Submitted Date: 03/11/15
Sheet No. 005

VTI-2S
PERSONALITY
MODULE
(SLOT 1)

TK 1+	9TB	X	1
TK 1-	9TN	X	2
			3
TK 2+	10TB	X	4
TK 2-	10TN	X	5
			6
			7

J3

CAB1+	9-100CEN	X	1
CAB1-			2
			3
CAB2+	10-100CEN	X	4
CAB2-			5
			6
IN 1+	B12	X	7
IN 1-	N12	X	8
			9
IN 2+	B12	X	10
IN 2-	N12	X	11

J4

PERSONALITY MODULE
LEGEND

TERMINAL LABEL → XXX | XXXX | X | X ← PIN NUMBER

APPLICATION DESCRIPTION

WIRE PRESENT

REV	DATE	DESCRIPTION
1	03/06/15	AS DESIGNED

GETS
Global Signaling

Designed By: BPC
Drawn By: BPC
Checked By: BDW
Approved By: AEB

TTCI

TTT HOUSE T-8

ELECTROLOGIXS 4-SLOT
MODULE CONNECTOR USAGE

Scale: NTS
CADD File Name: T8006.DWG
Submitted Date: 03/11/15
Sheet No. 006

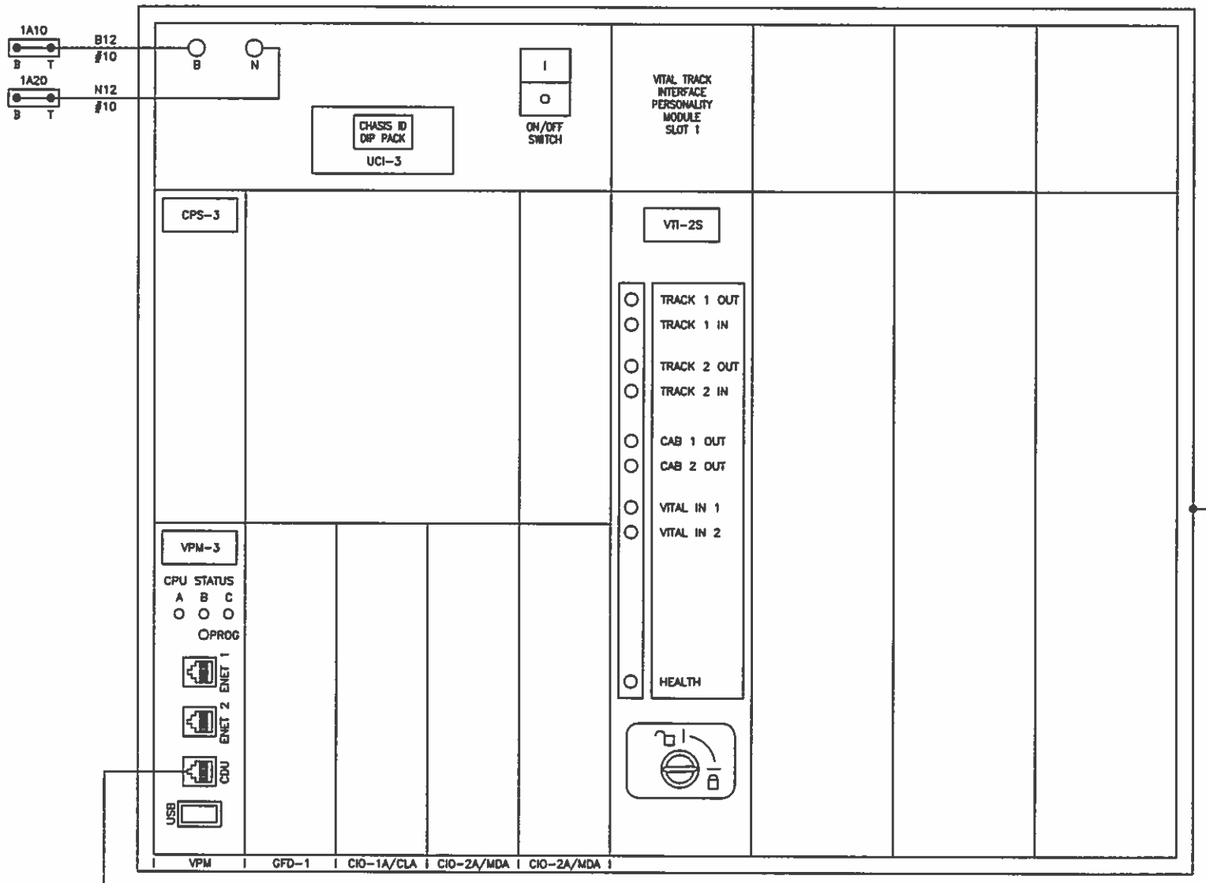

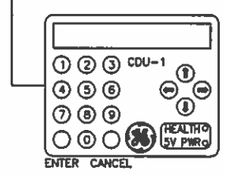

APPLICATION SOFTWARE INFORMATION	
NAME	
REV.	
CHECKSUM	
CRC	

TYPICAL INSTALLATION OF
EPROM & DIP SHUNT

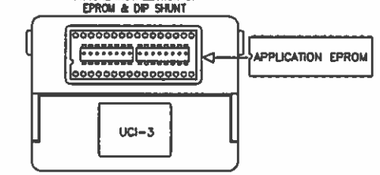

CHASSIS ID DIP SHUNTS
LOCATED ON BACKPLANE
UNDERNEATH UCI-3 MODULE

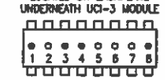

○ = TAB INTACT (MADE)
● = TAB PUNCHED OUT (BROKEN)

VITAL SELECTION ID-N/A

VITAL SELECTION DIP SHUNTS
LOCATED INSIDE UCI-3 MODULE
UNDERNEATH EPROM

○ = TAB INTACT (MADE)
● = TAB PUNCHED OUT (BROKEN)

NOTES:

CDU-1 = CONTROL DISPLAY UNIT
CPS-3 = CENTRAL POWER SUPPLY
VPM-3 = VITAL PERIPHERAL MASTER MODULE
UCI-3 = CHASSIS INFORMATION MODULE
VTI-2S = VITAL TRACK INTERFACE
VLD-R16S = VITAL LAMP DRIVER MODULE
VIO-86S = VITAL INPUTS/OUTPUTS
CIO-CLA = COMMUNICATION INPUT/OUTPUT CURRENT LOOP ADAPTER

REV	DATE	DESCRIPTION
1	03/11/15	AS DESIGNED

GETS
Global Signaling

Designed By:	BPC
Drawn By:	BPC
Checked By:	BDW
Approved By:	AEB

TTCI

TTT HOUSE T-8

ELECTROLOGIXS 4-SLOT
HARDWARE CONFIGURATION

Scale:	NTS
CADD File Name:	T8007.DWG
Submitted Date:	03/11/15
Sheet No.	007

SYSTEM CONFIGURATION				
DATE/TIME	SETTING MADE WHEN USING PTC CONFIGURATION			
DIAGNOSTIC PORT				
ETHERNET CONFIG.				
OFFICE CONFIG	NA			
LCP CONFIG	ENABLED	TRUE		
VITAL REMOTE CONFIG	LOCAL PORT	REMOTE PORT	REMOTE PORT CONFIG	
	ETHERNET PORT 1 192.168.40.78	NA	NA	NA
	ETHERNET PORT 2 192.168.1.12	NA	NA	NA
	SERIAL PORT 2	NA		
	SERIAL PORT 3	NA		
TRACK CONFIG	SLOT	TRACK	CONFIGURATION	
	SLOT 1: 9T_TI1	1	TRANSMITTER	4V
			RECEIVER	0.5A
			CODE 5 TYPE	ALT 5
	SLOT 1: 10T_TI1	2	TRANSMITTER	4V
			RECEIVER	0.5A
			CODE 5 TYPE	ALT 5

NOTES:
1. FINAL VITAL CONFIGURATION SETTINGS ARE SUBJECT TO CHANGE IN ACCORDANCE WITH SOFTWARE UPGRADES. FINAL VITAL CONFIGURATION SETTINGS TO BE UPDATED ON AS-IN-SERVICE.

REV	DATE	DESCRIPTION
1	03/11/15	AS DESIGNED

GETS
Global Signaling

Designed By: BPC
Drawn By: BPC
Checked By: BDW
Approved By: AEB

TTCI

TTT HOUSE T-8

ELECTROLOGIXS 4-SLOT CONFIGURATION SETTINGS

Scale: NTS
CADD File Name: T8008.DWG
Submitted Date: 03/11/15
Sheet No. 008

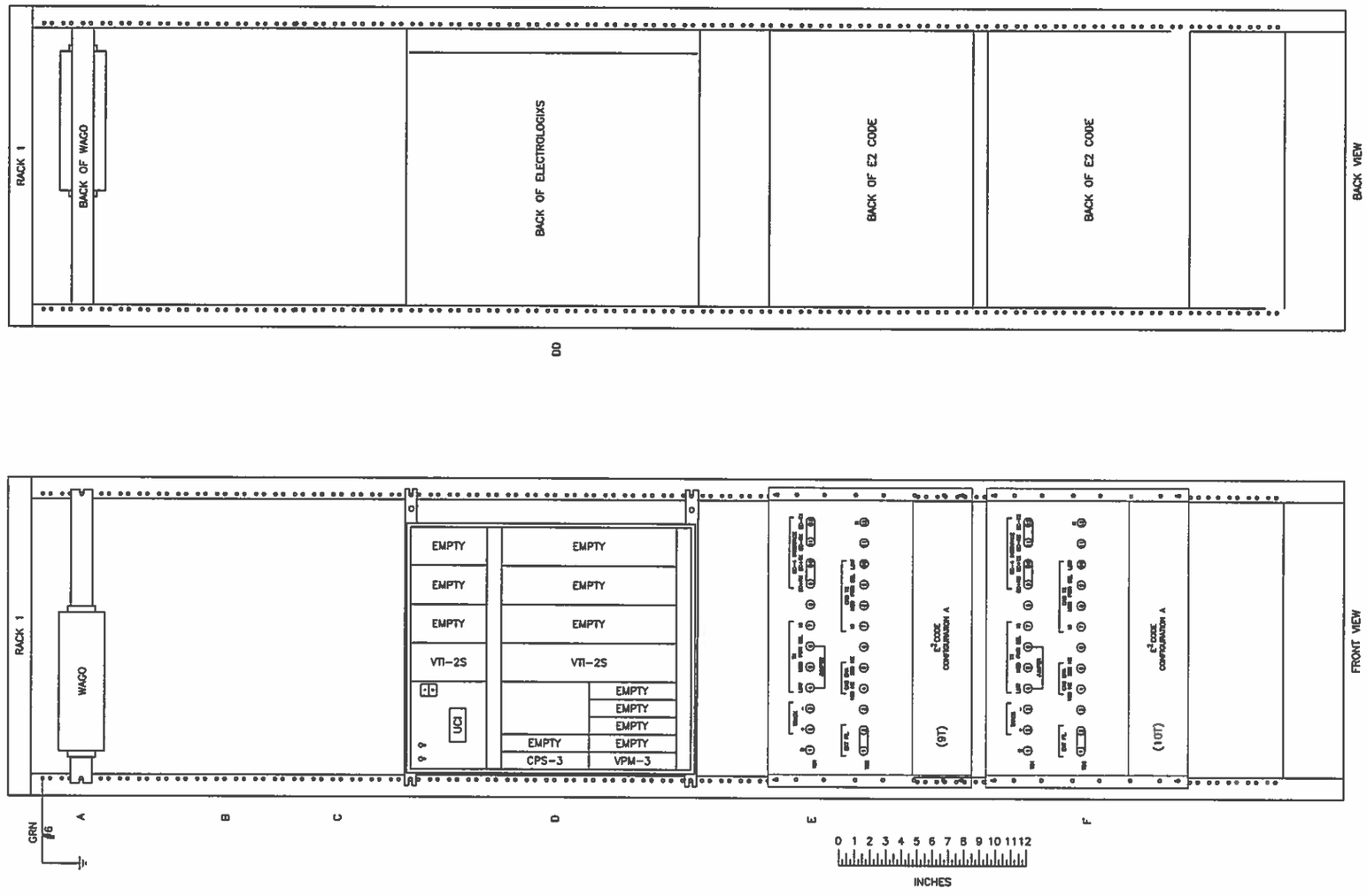

REV	DATE	DESCRIPTION
1	03/11/15	AS DESIGNED

GETS
Global Signaling

Designed By:	BPC
Drawn By:	BPC
Checked By:	BDW
Approved By:	AEB

TTCI

TTT HOUSE T-8

RACK 1 LAYOUT

Scale:	NTS
CADD File Name:	T8009.DWG
Submitted Date:	03/11/15
Sheet No.	009

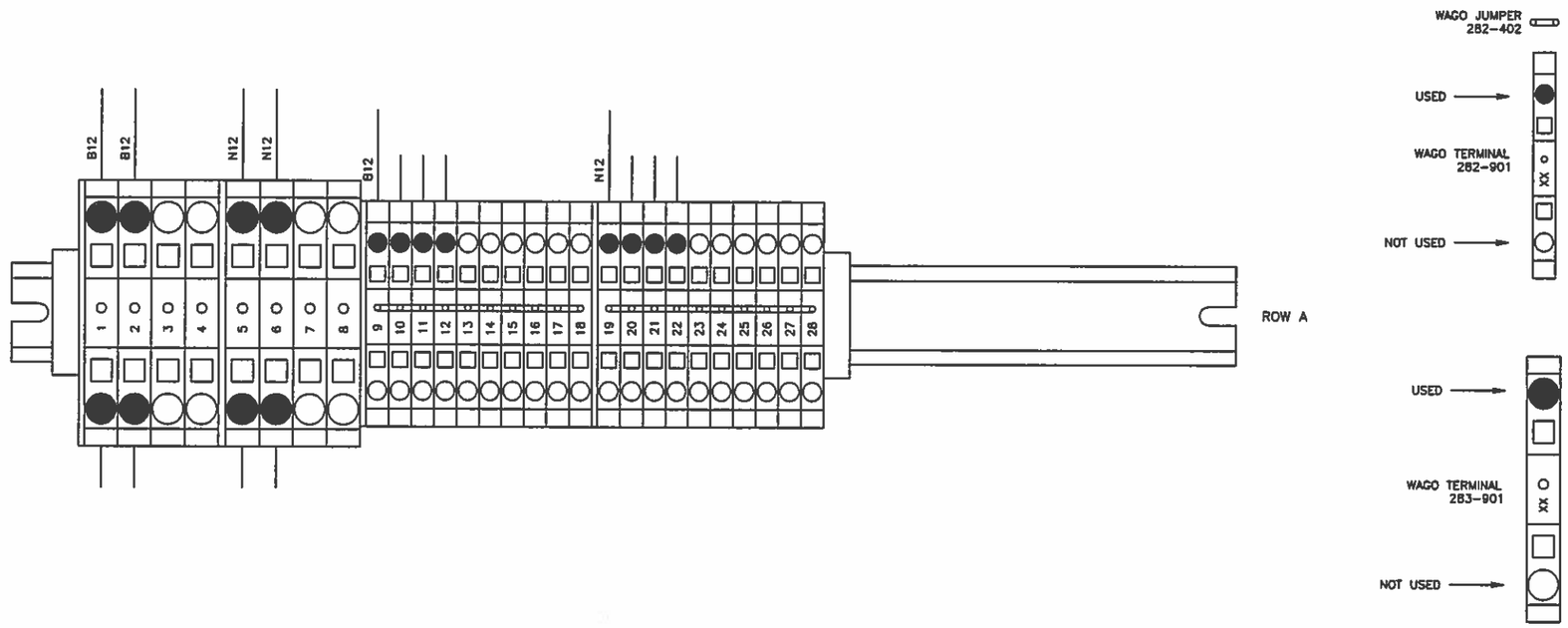

REV	DATE	DESCRIPTION
1	03/11/15	AS DESIGNED

GETS
Global Signaling

Designed By:	BPC
Drawn By:	BPC
Checked By:	BDW
Approved By:	AEB

TTCI

TTT HOUSE T-8

WAGO & RELAY LAYOUT
RACK 1, ROW A & B

Scale:	NTS
CADD File Name:	T8010.DWG
Submitted Date:	03/11/15
Sheet No.	010